FED. ROAD DIV. NO.	STATE	FED. AID PROJ. NO.
1	ME	I-IG-395-8(82)176

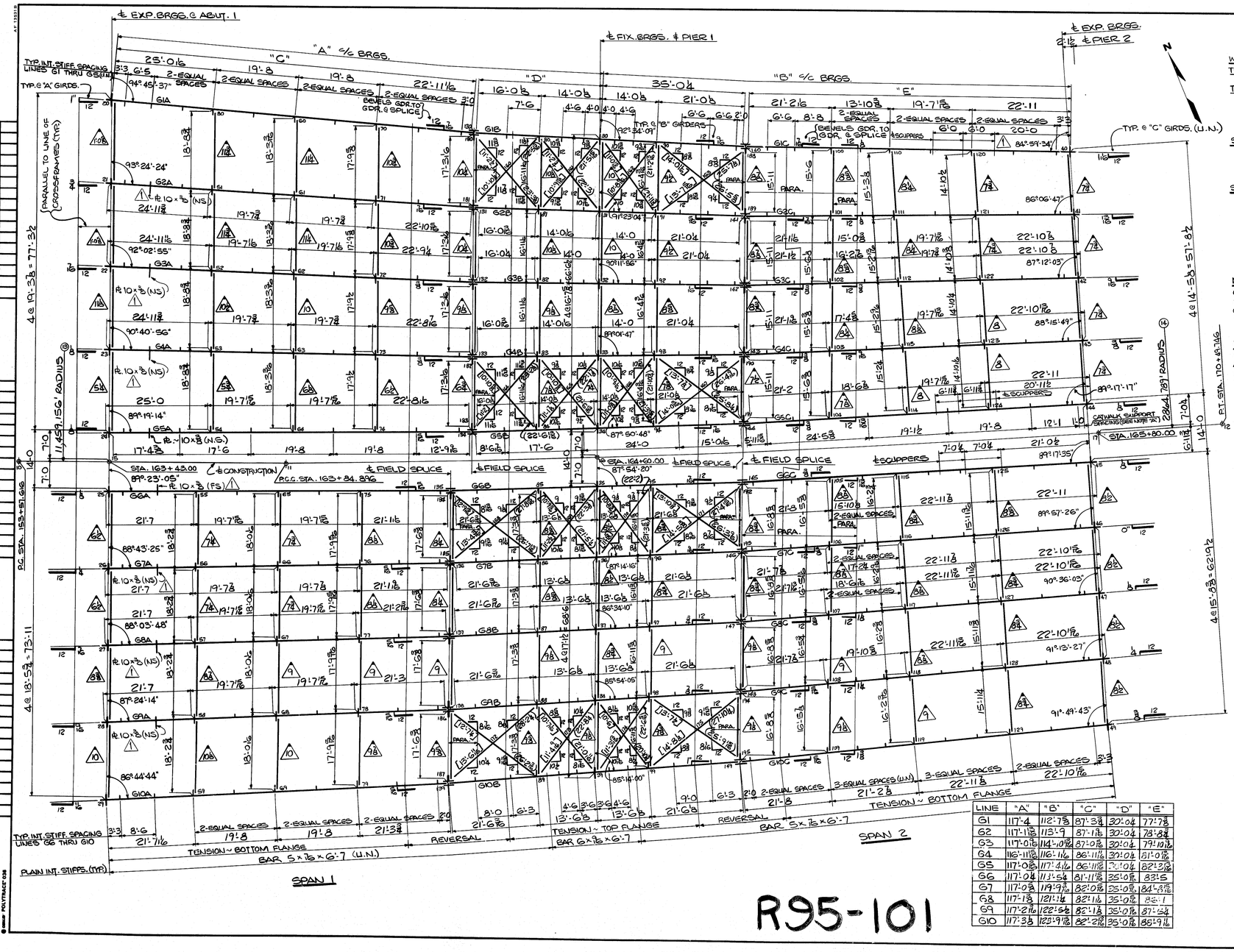

LINE	"A"	"B"	"C"	"D"	"E"
G1	117'-4	112'-7 3/8"	87'-3 3/8"	30'-0 1/4"	77'-7 3/8"
G2	117'-1 15/16"	113'-9	87'-1 7/16"	30'-0 1/4"	78'-8 3/4"
G3	117'-0 15/16"	114'-10 15/16"	87'-0 7/16"	30'-0 1/4"	79'-10 13/16"
G4	116'-11 15/16"	116'-1 1/16"	86'-11 7/16"	30'-0 1/4"	81'-0 7/16"
G5	117'-0 3/8"	117'-4 1/16"	86'-11 7/16"	30'-0 1/4"	82'-2 3/8"
G6	117'-0 1/4"	117'-5 1/4"	87'-11 7/16"	35'-0 7/8"	83'-5
G7	117'-0 3/8"	119'-9 3/16"	88'-0 7/8"	35'-0 7/8"	84'-4 15/16"
G8	117'-1 3/8"	121'-1 1/4"	88'-1 1/16"	35'-0 7/8"	85'-1
G9	117'-2 7/16"	122'-5 3/8"	88'-1 1/8"	35'-0 7/8"	87'-5 1/4"
G10	117'-3 3/8"	123'-9 7/16"	88'-2 7/16"	35'-0 7/8"	88'-9 1/16"

WELDING OF INT. STIFFS. ℄ C.F. CONN. PL'S.
TENSION BOTT. FLG.: TIGHT FIT BOTTOM
WELD TOP
TENSION TOP FLG.: WELD BOTTOM
TIGHT FIT TOP
REVERSAL: TIGHT FIT TOP & BOTTOM

STIFFENER CORNER CUPS ~ UNIT 1

BRG. STIFF. ~ 1 1/2 x 3 1/2 (TYP)
INT. STIFF. ~ 3 1/2 x 3 1/2 (TYP.)

STIFFENER SIZES:

BRG. STIFFS. - ABUT. 1 ~ 8 x 1
PIER 1 ~ 12 x 1 3/8
PIER 2 ~ 8 x 1
C.F. CONN. STIFFS. ~ 7 x 15/16 (U.N.)
PLAIN INT. STIFFS. ~ AS NOTED
C.F. CONN. STIFFS. ON SKEW PL. ~ 8 x 1/2

NOTE "A"

CATWALK SPACING IS GIVEN TO ℄ 3/4" PL. & WG x 20.
PLAIN INTERMEDIATE STIFFENERS OPPOSITE CATWALK SUPPORT SHOULD BE PLACED @ ℄ OF THE 3/4" PL. & WG x 20.

HANDRAIL NOTE:

HANDRAIL TO BE PLACED ON INSIDE OF FASCIA GIRDERS AND BOTH SIDES OF INTERIOR GIRDERS. (U.N.) NO HANDRAIL REQ'D. (NS) OF GIRDER LINE S. HANDRAIL TO EXTEND FROM FIRST INTERMEDIATE CROSSFRAME IN SPAN 1 TO LAST INTERMEDIATE CROSSFRAME IN SPAN 8.

NOTES

1. LONGITUDINAL SPACING IS GIVEN ALONG BOTTOM OF WEB IN CAMBERED POSITION.
2. ALL TRANSVERSE DIMENSIONS GIVEN HORIZONTALLY.
3. ENDS AND BEARING STIFFENERS TO BE VERTICAL.
4. CROSSFRAME SPACING IS GIVEN TO ℄ STIFFENER ALONG BOTTOM OF WEB.
5. MATERIAL TO BE ASTM A588-GR. A, B, E OR G-UNPAINTED (U.N.)
6. DIMENSIONS GIVEN THUS: 1/16 ARE DIFFERENCES IN ELEVATIONS BETWEEN GIRDERS AT TIME OF ERECTION. ARROW POINTS TOWARD LOW GIRDER.
7. DIMENSIONS GIVEN THUS: ((23'-3 1/8)) ARE THE P.T.O.P. DIMENSIONS OF THE LATERAL BRACING GIVEN IN THE PLANE OF THE BRACE.
8. HORIZONTAL BRACING IS TO BE LEVEL IN THE TRANSVERSE DIRECTION.
9. FIELD CONNECTIONS TO BE MADE WITH 7/8" ϕ HIGH STRENGTH BOLTS (U.N.) ~ ASTM A325 - TYPE 3.
10. MATERIAL NOTED (T) ON DETAIL DRAWINGS SHALL RECEIVE CHARPY V-NOTCH TESTING.
11. INTERMEDIATE C.F. CONNECTION AND INTERMEDIATE STIFFENERS TO BE 90° TO BOTTOM FLANGE.
12. FILLET WELDS FOR PLATES OVER 3/4" THICK SHALL BE 5/16 U.N. OTHERWISE ON CONTRACT DRAWINGS.
13. INTERMEDIATE PLAIN STIFFENERS AND PLAIN BEARING STIFFENERS TO BE SET 90° TO WEB.
14. WORK THIS DRAWING WITH DRAWINGS WS2, WS3, & WS4.
15. FOR GENERAL NOTES, SEE DRAWING. N1.
16. POINT NOS. 180 THRU 195 ARE HORIZONTAL BRACING WORK POINTS AND ARE LOCATED 9" FROM ℄ GIRDER ALONG ℄ STIFFENER.
17. DIMENSIONS GIVEN THUS: [11'-2 1/8] ARE THE DIMENSIONS FROM END KP OF THE HORIZONTAL BRACE TO THE INTERSECTION OF THE TWO BRACES ON THE SIDE OF THE BRACE DIMENSION IS GIVEN.

NO.	REVISION	DATE
1	Contract revision Control # 14	9-10-84

HIGH STEEL STRUCTURES, INC.
1905 Old Philadelphia Pike
Lancaster, Pennsylvania 17603
Phone 717/299-5211
A Subsidiary of High Industries, Inc.

FIGURING PLAN ~ SPANS 1 & 2
I-395 BRIDGE OVER PENOBSCOT RIVER
I-395 BRIDGE STA. 164+60.00
PENOBSCOT COUNTY
STATE OF MAINE
DEPARTMENT OF TRANSPORTATION

STATE CONTRACT OR REF. NO. 6 CONTRACTOR GIANBRO CORP.
IN CHARGE: HINKLE MADE BY: BJK CHK.D BY: JLC DATE: 5-2-84
CONTRACT NUMBER: ME-84088-1 DRAWING NUMBER: WS1

R95-101

FED. ROAD DIV. NO.	STATE	FED. AID PROJ. NO.
1	ME	IIG-395-8(82) 176

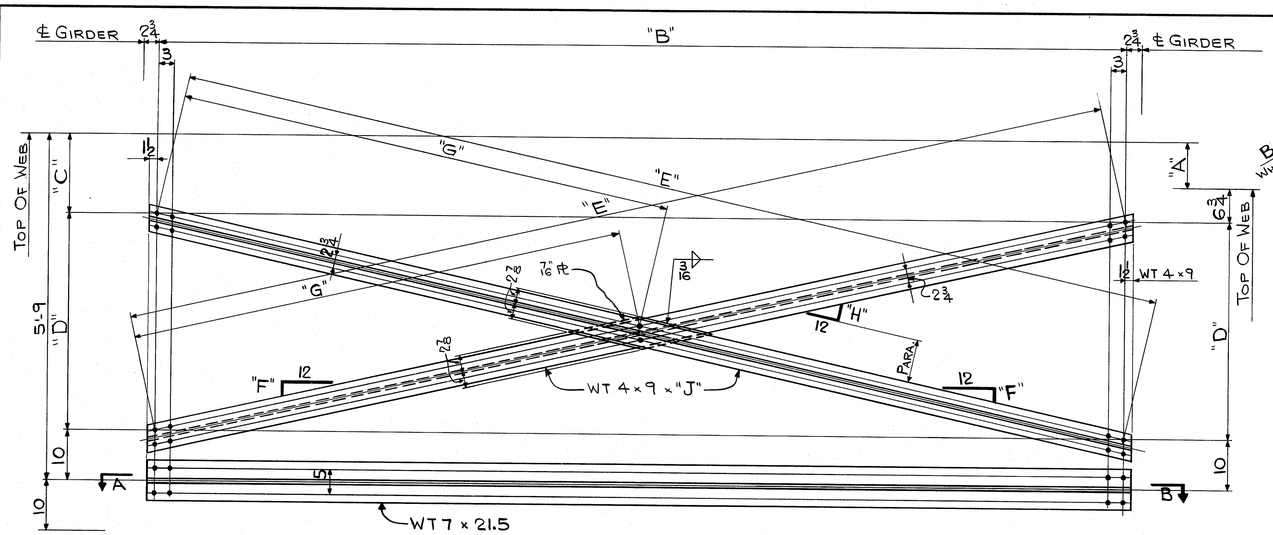

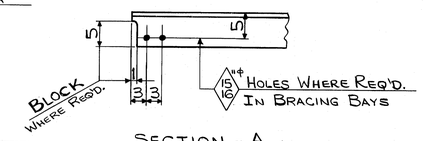

SECTION - A

SECTION - B (OPP. HAND)

"A"	"B"	"C"	"D"	"E"	"F"	"G"	"H"	"J"
8	14'-4 7/8	1'-2 3/4	3'-8 1/4	14'-10 3/8	3 1/16	7'-5 1/16	6 9/16	15'-2 9/16
8	14'-4 3/4	1'-2 3/4	3'-8 1/4	14'-10 9/16	3 1/16	7'-5 3/16	6 7/16	15'-2 3/4
7 3/4	14'-4 1/8	1'-2 1/2	3'-8 1/2	14'-10 1/2	3 1/16	7'-5 1/4	6 5/8	15'-2 15/16
7 3/4	14'-5	1'-2 1/2	3'-8 1/2	14'-10 5/8	3 1/16	7'-5 5/16	6 3/8	15'-3 1/16
8	14'-8 3/4	1'-2 3/4	3'-8 1/4	15'-2 9/16	3	7'-7 1/8	6 7/16	15'-6 3/8
8 1/8	14'-9 1/16	1'-2 7/8	3'-8 1/8	15'-2 1/2	3	7'-7 1/4	6 3/8	15'-6 7/8
8 1/4	14'-9 9/16	1'-3	3'-8	15'-2 11/16	3	7'-7 3/8	6 3/8	15'-7 1/16
8 1/4	14'-9 3/8	1'-3	3'-8	15'-3	3	7'-7 1/2	6 5/16	15'-7 3/8
8 3/8	15'-0 1/2	1'-3 3/8	3'-7 5/8	15'-5 11/16	2 7/8	7'-8 3/8	6 9/16	15'-10 1/16
8 5/8	15'-0 5/8	1'-3 3/8	3'-7 3/8	15'-5 13/16	2 7/8	7'-8 15/16	6 7/16	15'-10 5/8
8 1/4	15'-0 3/8	1'-3	3'-8	15'-6 3/8	2 15/16	7'-9 1/16	6 3/16	15'-10 1/2
7 7/8	15'-0 7/8	1'-2 3/8	3'-8 3/8	15'-6 1/4	2 15/16	7'-9 1/8	6 1/4	15'-10 5/8
8 3/4	15'-5 3/4	1'-3 1/2	3'-7 1/2	15'-10 3/4	2 13/16	7'-11 3/8	5 15/16	16'-3 1/16
8 3/4	15'-5 7/8	1'-3 1/2	3'-7 1/2	15'-10 7/8	2 13/16	7'-11 7/16	5 15/16	16'-3 3/16
8 3/4	15'-5 15/16	1'-3 1/2	3'-7 1/2	15'-10 15/16	2 13/16	7'-11 1/2	5 15/16	16'-3 1/4
8 5/8	15'-6 1/16	1'-3 3/8	3'-7 3/8	15'-11 1/8	2 13/16	7'-11 7/16	5 15/16	16'-3 7/16
9	15'-8 1/16	1'-3 3/4	3'-7 1/4	16'-1 9/16	2 3/4	8'-0 13/16	5 15/16	16'-5 7/8
8 7/8	15'-8 7/8	1'-3 5/8	3'-7 3/8	16'-1 13/16	2 3/4	8'-0 7/8	5 13/16	16'-6 1/16
8 7/8	15'-9 1/16	1'-3 5/8	3'-7 3/8	16'-2	2 3/4	8'-1	5 13/16	16'-6 1/4
8 3/4	15'-9 1/4	1'-3 1/2	3'-7 1/2	16'-2 9/16	2 3/4	8'-1 1/16	5 13/16	16'-6 7/16
7 3/8	15'-10 1/16	1'-2 7/8	3'-8 7/8	16'-3 7/8	2 13/16	8'-1 15/16	6	16'-8 9/16
8 5/8	15'-10 1/16	1'-3 3/8	3'-7 5/8	16'-3 5/8	2 3/4	8'-1 13/16	5 13/16	16'-7 7/8
9 1/2	15'-10 1/16	1'-4 1/4	3'-6 3/4	16'-3 7/16	2 11/16	8'-1 11/16	5 11/16	16'-7 11/16
8 7/8	16'-0 1/8	1'-3 5/8	3'-7 3/8	16'-4 15/16	2 11/16	8'-2 1/2	5 11/16	16'-9 9/16
8 7/8	16'-0 3/16	1'-3 5/8	3'-7 3/8	16'-5	2 11/16	8'-2 1/2	5 11/16	16'-9 1/4
9	16'-0 1/4	1'-3 3/4	3'-7 1/4	16'-5 1/16	2 11/16	8'-2 1/2	5 11/16	16'-9 5/16
9 1/8	16'-0 3/8	1'-3 7/8	3'-7 1/8	16'-5 1/8	2 11/16	8'-2 7/16	5 11/16	16'-9 3/8
7 7/8	16'-5 7/16	1'-1 7/8	3'-9 7/8	16'-10 5/8	2 3/4	8'-5 7/16	5 13/16	17'-2 15/16
9 1/8	16'-5 9/16	1'-3 7/8	3'-7 7/8	16'-10 3/16	2 5/8	8'-5 1/8	5 1/2	17'-2 7/16
10 1/8	16'-5 9/16	1'-4 3/8	3'-6 7/8	16'-10	2 7/16	8'-5	5 3/8	17'-2 15/16
8 3/4	16'-6 1/8	1'-3 1/2	3'-7 1/2	16'-10 3/8	2 5/8	8'-5 7/16	5 9/16	17'-3 1/16
9	16'-6 1/8	1'-3 3/4	3'-7 1/4	16'-10 13/16	2 5/8	8'-5 3/8	5 1/2	17'-3
9 3/8	16'-6 1/8	1'-4 1/8	3'-6 7/8	16'-10 7/16	2 5/8	8'-5 3/8	5 7/16	17'-2 15/16
8 5/8	16'-9 7/8	1'-3 3/8	3'-7 5/8	17'-2 9/16	2 5/8	8'-7 1/4	5 7/16	17'-6 3/4
9 1/8	16'-9 7/8	1'-3 3/8	3'-7 7/8	17'-2 7/16	2 9/16	8'-7 3/16	5 3/8	17'-6 5/8

"A"	"B"	"C"	"D"	"E"	"F"	"G"	"H"	"J"
9 5/8	16'-9 7/8	1'-4 3/8	3'-6 5/8	17'-2 5/16	2 7/16	8'-7 3/16	5 5/16	17'-6 1/2
7 3/4	17'-6 9/16	1'-2 1/2	3'-8 1/2	17'-11 3/16	2 9/16	8'-11 5/8	5 5/16	18'-3 3/8
9	17'-6 9/16	1'-3 3/4	3'-7 1/4	17'-10 15/16	2 7/16	8'-11 1/2	5 5/8	18'-3 5/8
10	17'-6 9/16	1'-4 3/4	3'-6 1/4	17'-10 3/4	2 7/16	8'-11 3/8	5	18'-2 7/8
7 1/4	17'-9 1/4	1'-2	3'-9	18'-1 15/16	2 7/16	9'-1	5 5/16	18'-6 1/8
8 7/8	17'-9 1/4	1'-3 5/8	3'-7 3/8	18'-1 5/8	2 7/16	9'-0 13/16	5 1/16	18'-5 3/4
10 5/8	17'-9 1/4	1'-4 7/8	3'-6 7/8	18'-1 3/8	2 3/8	9'-0 11/16	4 15/16	18'-5 1/2
6 1/8	17'-9 11/16	1'-0 7/8	3'-10 7/8	18'-2 5/8	2 9/16	9'-1 15/16	5 7/16	18'-6 13/16
10	17'-9 11/16	1'-4 3/4	3'-6 1/4	18'-1 13/16	2 3/8	9'-0 15/16	4 15/16	18'-5 15/16
11 1/4	17'-9 11/16	1'-6	3'-5	18'-1 11/16	2 5/16	9'-0 13/16	4 15/16	18'-5 5/8
5 3/4	18'-3 1/4	1'-0 1/2	3'-10 1/2	18'-8 1/8	2 9/16	9'-4 1/16	5 5/16	19'-0 5/16
10 1/2	18'-3 1/4	1'-5 1/4	3'-5 3/4	18'-7 7/16	2 5/16	9'-3 5/8	4 3/4	18'-11 1/4
11 3/4	18'-3 1/4	1'-6 1/2	3'-4 1/2	18'-6 15/16	2 3/16	9'-3 1/2	4 9/16	18'-11

WORK THIS DWG. WITH DWGS. WS1 & WS4

NO.	REVISION	DATE

HIGH STEEL STRUCTURES, INC.
1905 Old Philadelphia Pike
Lancaster, Pennsylvania 17603
Phone 717/299-5211
A Subsidiary of High Industries, Inc.

INT. CROSSFRAME LAYOUTS
I-395 BRIDGE OVER PENOBSCOT RIVER
I-395 BRIDGE STA. 164+60.00
PENOBSCOT COUNTY
STATE OF MAINE
DEPARTMENT OF TRANSPORTATION

STATE CONTRACT OR REF. NO. 6 CONTRACTOR CIANBRO CORP.
IN CHARGE: HINKLE MADE BY: JLC CHK.D. BY: BJK DATE: 5-7-84
CONTRACT NUMBER: ME-84088-1 DRAWING NUMBER: WS2

R95-102

FED. ROAD DIV. NO.	STATE	FED. AID PROJ. NO.
1	ME	I-IG-395-8(82)176

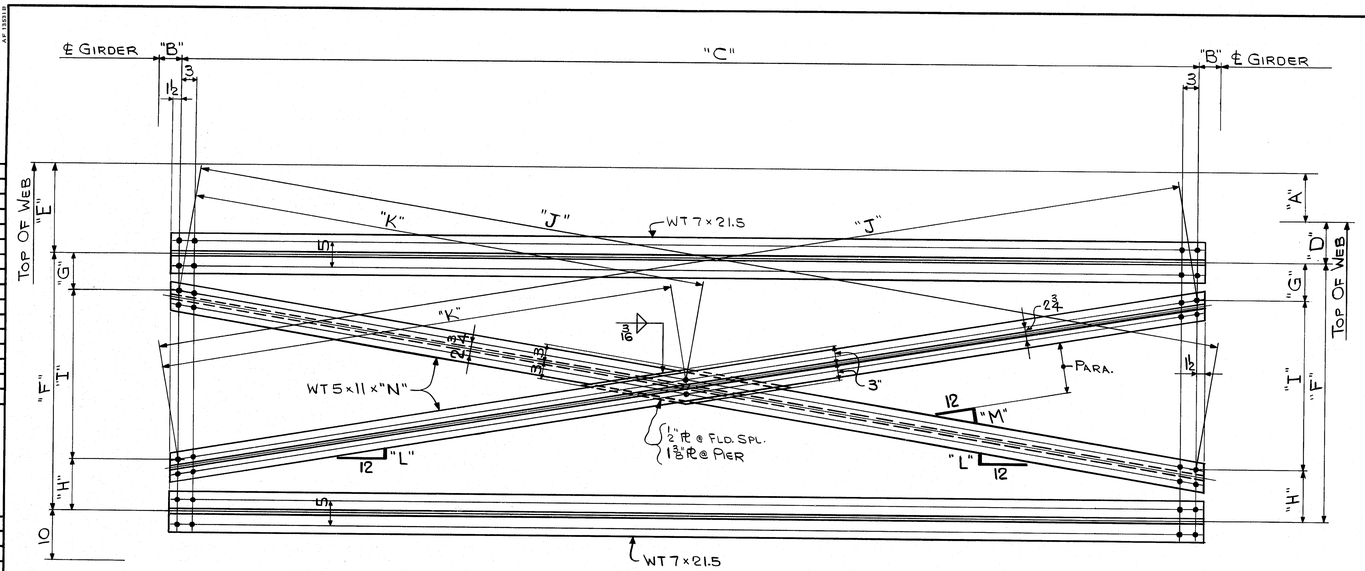

NOTE: SEE BRACING LAYOUTS FOR HOLE LOCATIONS IN BOTTOM CROSSFRAME MEMBERS.

"A"	"B"	"C"	"D"	"E"	"F"	"G"	"H"	"I"	"J"	"K"	"L"	"M"	"N"
8 3/8	4 1/4	15'-2 1/2	8 1/4	1'-4 5/8	4'-4 3/8	7 1/2	10 1/4	2'-10 5/8	15'-5 3/4	7'-8 7/8	2 1/4	4 3/4	15'-9 15/16
8 3/8	4 1/4	15'-2 1/2	8 1/4	1'-5 1/8	4'-3 7/8	7 1/2	10 1/4	2'-10 1/8	15'-5 1/16	7'-8 13/16	2 1/4	4 5/8	15'-9 13/16
7 1/4	7 3/4	15'-4 1/8	7 1/2	1'-2 3/4	4'-6 1/4	8 1/4	11	2'-11	15'-7 7/16	7'-9 11/16	2 5/16	4 3/4	15'-11 9/16
8 7/8	7 3/4	15'-4 1/8	7 1/2	1'-4 3/8	4'-4 5/8	8 1/4	11	2'-9 3/8	15'-7 1/8	7'-9 9/16	2 5/16	4 1/2	15'-11 1/4
10	7 3/4	15'-4 1/8	7 1/2	1'-5 1/2	4'-3 1/2	8 1/4	11	2'-8 1/4	15'-6 15/16	7'-9 7/16	2 1/8	4 5/16	15'-11
8 3/4	4 1/4	16'-0 1/8	8 1/4	1'-5	4'-4	7 1/2	10 1/4	2'-10 1/4	16'-3 1/8	8'-1 7/16	2 1/8	4 7/16	16'-7 1/4
9 1/8	4 1/4	16'-0 1/8	8 1/4	1'-5 3/8	4'-3 5/8	7 1/2	10 1/4	2'-9 7/8	16'-3 1/16	8'-1 9/16	2 1/8	4 3/8	16'-7 1/8
8 1/2	7 3/4	15'-10	7 1/2	1'-4	4'-5	8 1/4	11	2'-9 3/4	16'-1	8'-0 1/2	2 1/8	4 3/8	16'-5 1/16
8 3/4	7 3/4	15'-10	7 1/2	1'-4 1/4	4'-4 3/4	8 1/4	11	2'-9 1/2	16'-0 15/16	8'-0 7/16	2 1/8	4 3/8	16'-5
9 1/8	7 3/4	15'-10	7 1/2	1'-4 5/8	4'-4 3/8	8 1/4	11	2'-9 1/8	16'-0 7/8	8'-0 7/16	2 1/16	4 5/16	16'-4 15/16
6 3/4	4 1/4	16'-6 9/16	8 1/4	1'-3	4'-6	7 1/2	10 1/4	3'-0 1/4	16'-9 7/8	8'-4 15/16	2 3/16	4 9/16	17'-1 15/16
9 1/8	↓	16'-6 9/16	↓	1'-5 3/8	4'-3 5/8	↓	↓	2'-9 7/8	16'-9 7/16	8'-4 11/16	2 1/16	4 3/16	17'-1 7/16
10 1/4	↓	16'-6 9/16	↓	1'-6 1/2	4'-2 1/2	↓	↓	2'-8 3/4	16'-9 1/4	8'-4 5/8	2	4 1/16	17'-1 1/4
8 1/4	↓	16'-9 7/8	↓	1'-4 1/2	4'-4 1/2	↓	↓	2'-10 3/4	17'-0 7/8	8'-6 7/16	2 1/16	4 1/4	17'-4 7/8
9	↓	16'-9 7/8	↓	1'-5 1/4	4'-3 3/4	↓	↓	2'-10	17'-0 1/16	8'-6 5/8	2	4 1/16	17'-4 3/4
9 5/8	↓	16'-9 7/8	↓	1'-5 7/8	4'-3 1/8	↓	↓	2'-9 3/8	17'-0 5/8	8'-6 5/16	2	4 1/16	17'-4 5/8
OPP. HAND 7 1/2	↓	15'-2 1/2	↓	1'-3 3/4	4'-5 1/4	↓	↓	2'-11 1/2	15'-5 15/16	7'-8 15/16	2 5/16	4 7/8	15'-10 1/8
8 1/8	↓	15'-2 1/2	↓	1'-5 1/8	4'-3 7/8	↓	↓	2'-10 1/8	15'-5 1/16	7'-8 13/16	2 1/4	4 5/8	15'-9 13/16
8 3/4	↓	16'-0 1/8	↓	1'-5	4'-4	↓	↓	2'-10 1/4	16'-3 1/8	8'-1 9/16	2 1/8	4 7/16	16'-7 1/4
9 1/8	4 1/4	16'-0 1/8	8 1/4	1'-5 3/8	4'-3 5/8	7 1/2	10 1/4	2'-9 7/8	16'-3 1/16	8'-1 9/16	2 1/8	4 3/8	16'-7 1/8

WORK THIS DWG. WITH DWGS. WS1 & WS4

NO.	REVISION	DATE

HIGH STEEL STRUCTURES, INC.
1905 Old Philadelphia Pike
Lancaster, Pennsylvania 17603
Phone 717/299-5211
A Subsidiary of High Industries, Inc.

CROSSFRAME LAYOUTS
I-395 BRIDGE OVER PENOBSCOT RIVER
I-395 BRIDGE STA. 164+60.00
PENOBSCOT COUNTY
STATE OF MAINE
DEPARTMENT OF TRANSPORTATION

STATE CONTRACT OR REF. NO. 6 CONTRACTOR CIANBRO CORP.
IN CHARGE: HINKLE MADE BY: JLC CHK.D. BY: BJK DATE: 5-9-84
CONTRACT NUMBER: ME-84088-1 DRAWING NUMBER: WS3

R95-103

© 1984 POLYTRACE® 035

FED. ROAD DIV. NO.	STATE	FED. AID PROJ. NO.
1	ME	I-IG-395-8(82)176

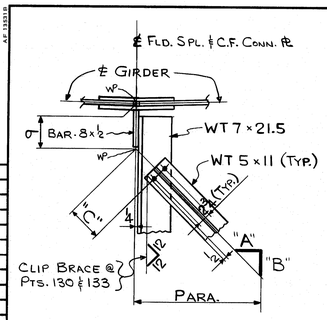

POINT	"A"	"B"	"C"
130	11⅜	12	6⅜
133	12	11 15/16	6⅛
135		8 13/16	5½
138		8 7/16	5½
141		9¼	5⅝
144		8 7/16	5½
146		8 7/16	5½
149	12	8 1/16	5½

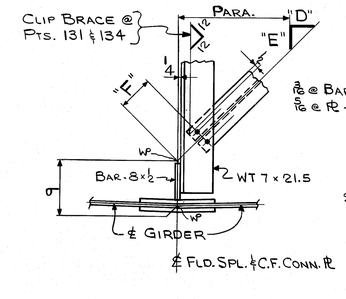

POINT	"D"	"E"	"F"
131	12	11⅞	6⅛
134	11 7/16	12	6⅜
136	12	9 13/16	5 13/16
139		10¼	5⅞
140		8⅜	5½
143		9⅛	5⅝
145		9½	5¾
148	12	9 15/16	5⅞

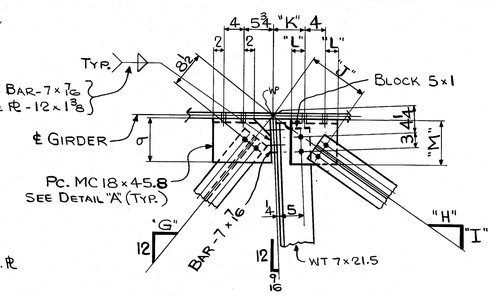

POINT	"G"	"H"	"I"	"J"	"K"	"L"	"M"
80	11⅛	10⅝	12	1'-3½	6⅜	2⅝	1'-2
90	9 9/16	12	8⅜	1'-0	6	2¼	9¼

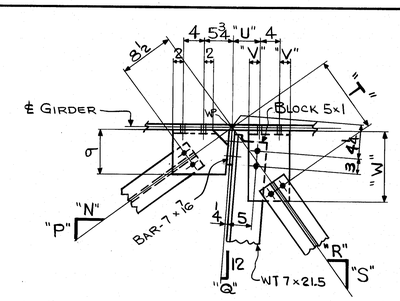

POINT	"N"	"P"	"Q"	"R"	"S"	"T"	"U"	"V"	"W"
83	11 13/16	12	5/16	9⅞	12	1'-3	5⅞	2¼	1'-1¾
85	12	9⅛	7/16	9	12	1'-3	5⅝	2⅛	1'-2¼
88	12	8⅞	⅞	8⅝	12	1'-3	5¼	2⅛	1'-2¼
93	10 5/16	12	5/16	12	8¾	1'-0	5⅞	2¼	9½
95	9⅞	12	7/16	12	9 3/16	1'-0	5¾	2¼	9¾
98	10 1/16	12	⅞	12	9⅜	1'-0	5½	2¼	9¾

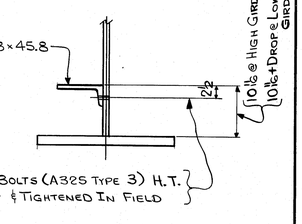

DETAIL "A"

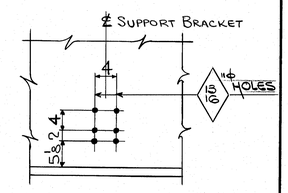

TYP. CONN. FOR CATWALK SUPPORT BRKT.

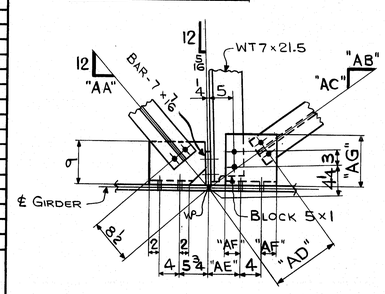

POINT	"AA"	"AB"	"AC"	"AD"	"AE"	"AF"	"AG"
81	11 15/16	9 13/16	12	1'-5¼	6⅝	3⅛	1'-3½
91	10⅜	12	8 13/16	1'-1¼	6⅜	2⅞	10¼

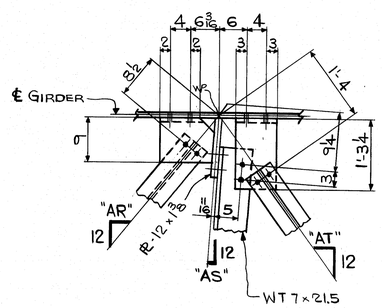

POINT	"AR"	"AS"	"AT"
33	10⅛	3/16	10 1/16
35	9 13/16	7/16	9⅞
38	10¼	⅞	8 11/16

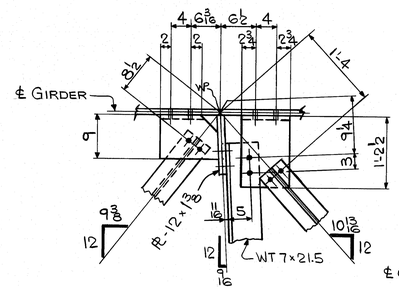

POINT - 30

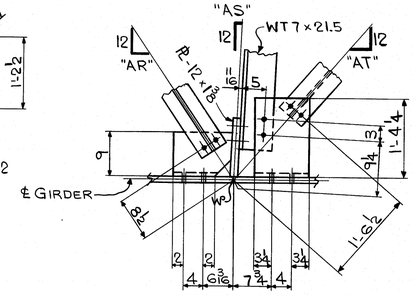

POINT	"AR"	"AS"	"AT"
34	9½	7/16	10¾
36	8 13/16	9/16	10⅛
39	8 1/16	1	10 1/16

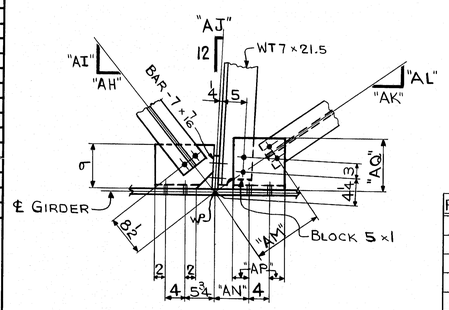

POINT	"AH"	"AI"	"AJ"	"AK"	"AL"	"AM"	"AN"	"AP"	"AQ"
84	11 3/16	12	7/16	10 9/16	12	1'-5¾	7	3¼	1'-3½
86	12	9 11/16	9/16	10 1/16	12	1'-5¾	6⅞	3⅛	1'-3¾
89	12	9 15/16	1	10½	12	1'-5¾	7	3¼	1'-3¾
94	9⅝	12	7/16	12	8 7/16	1'-2½			11
96	8⅞	12	9/16	12	8 9/16	1'-2½			11
99	8½	12	1	12	8⅜	1'-2½	7	3¼	11

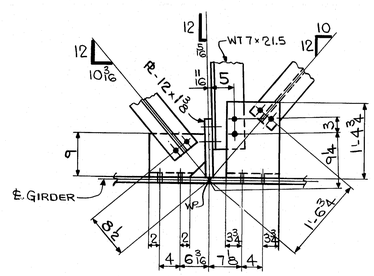

POINT - 31

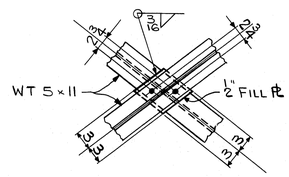

TYP. BRACING INTERSECTION CONN.

WORK THIS DWG. WITH DWGS.-WS1, WS2, & WS3

NO.	REVISION	DATE

HIGH STEEL STRUCTURES, INC.
1905 Old Philadelphia Pike
Lancaster, Pennsylvania 17603
Phone 717/299-5211
A Subsidiary of High Industries, Inc.

BRACING LAYOUTS
I-395 BRIDGE OVER PENOBSCOT RIVER
I-395 BRIDGE STA. 164+60.00
PENOBSCOT COUNTY
STATE OF MAINE
DEPARTMENT OF TRANSPORTATION

STATE CONTRACT OR REF. NO. 6 CONTRACTOR CIANBRO CORP.
IN CHARGE: HINKLE MADE BY: JLC CHK.D. BY: CS DATE: 5-21-84
CONTRACT NUMBER: ME-84088-1 DRAWING NUMBER: WS4

R95-104

© GRAF POLYTRACE 038

FED. ROAD DIV. NO.	STATE	FED. AID PROJ. NO.
1	ME	I-IG-395-8(82)176

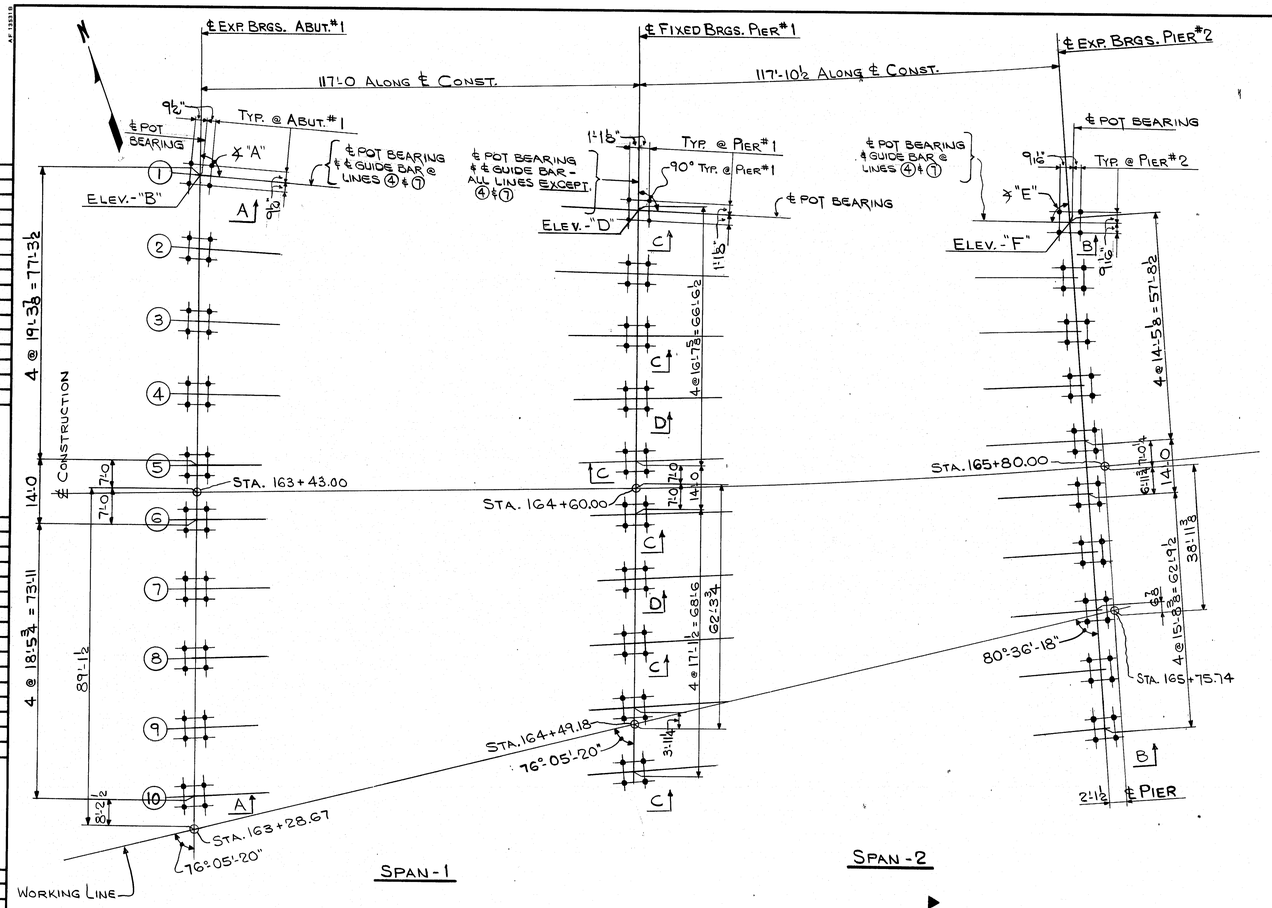

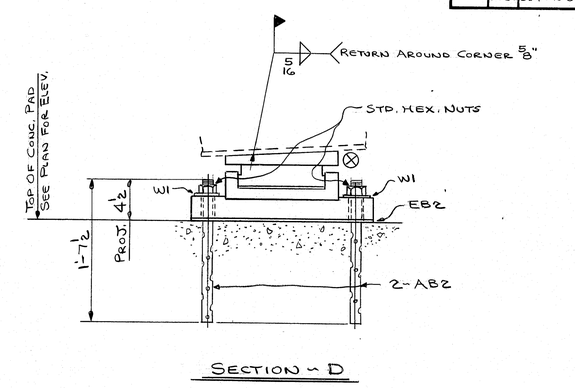

NOTES:

1. All dimensions are given horizontally.
2. Elevations are given to top of concrete pad.
3. Anchor bolt settings must be exact in every detail in accordance with this drawing.
4. Anchor bolts are furnished by High Steel Structures, Inc., and set by others.
5. For pot bearings see drawings D-1001-1A thru D-1001-1F & D-1003-1A.
6. Thickest edge of sole ⊗ marked thus ⊗
7. Top of concrete elevations & anchor bolt spacings have been made to conform to bearing details on Dwg D-1001-1A.
8. Special bridge seat preparation & grouting of anchor bolt holes, required by contract documents, by others than High Steel Structures, Inc.
9. Upset threads above nut for all anchor bolts. (AB marks)

LINE	"A"	"B" △2		"D" △1	"E"	"F" △2
1	94°-00'-00"	74.86		78.10	84°20'49"	81.15
2	92°-53'-20"	75.92		78.93	85°29'36"	81.80
3	91°-34'-28"	76.97		79.76	86°37'02"	82.45
4	90°-15'-31"	77.90		80.57	87°43'05"	83.10
5	88°-56'-32"	78.34		81.10	88°47'46"	83.75
6	88°-56'-32"	78.35		81.11	88°47'11"	83.78
7	88°-16'-46"	78.89		81.89	89°27'26"	84.49
8	87°-37'-01"	79.43		82.53	90°06'34"	85.20
9	86°-57'-19"	80.13		83.26	90°45'18"	85.90
10	86°-15'-39"	80.96		84.02	91°22'57"	86.61

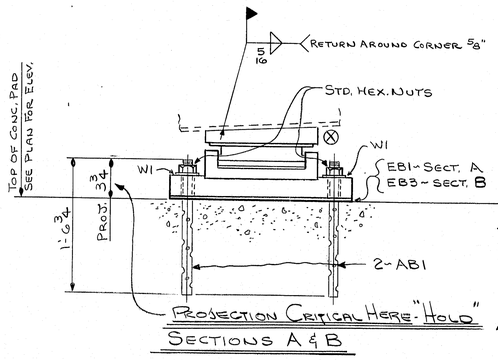

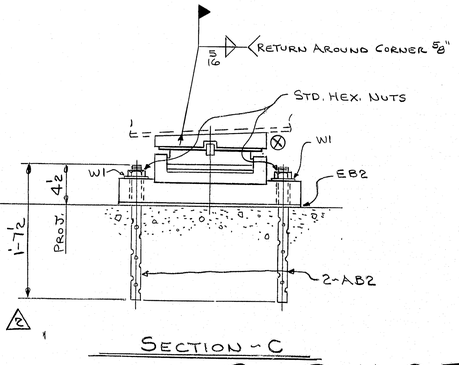

No.	REVISION	DATE
△2	REVISED ELEVATIONS AS PER PER DES. REV. (10-11 APRIL'S NOTES)	9-28-84 10-17-84
△1	general revision to agree with pot bearings	8-15-84

HIGH STEEL STRUCTURES, INC.
1905 Old Philadelphia Pike
Lancaster, Pennsylvania 17603
Phone 717/299-5211
A Subsidiary of High Industries, Inc.

ANCHOR BOLT PLAN
I-395 BRIDGE OVER PENOBSCOT RIVER
I-395 BRIDGE STA. 164+60.00
PENOBSCOT COUNTY
STATE OF MAINE
DEPARTMENT OF TRANSPORTATION

STATE CONTRACT OR REF. NO. 6 CONTRACTOR CIANBRO CORP.
IN CHARGE: HINKLE MADE BY: G.F.Z. J.L.C. CHK.D. BY: CS DATE 6-26-84
CONTRACT NUMBER: ME-84088-1 DRAWING NUMBER: E1A

R95-105

FED. ROAD DIV. NO.	STATE	FED. AID PROJ. NO.
1	ME	I-IG-395-8(82)176

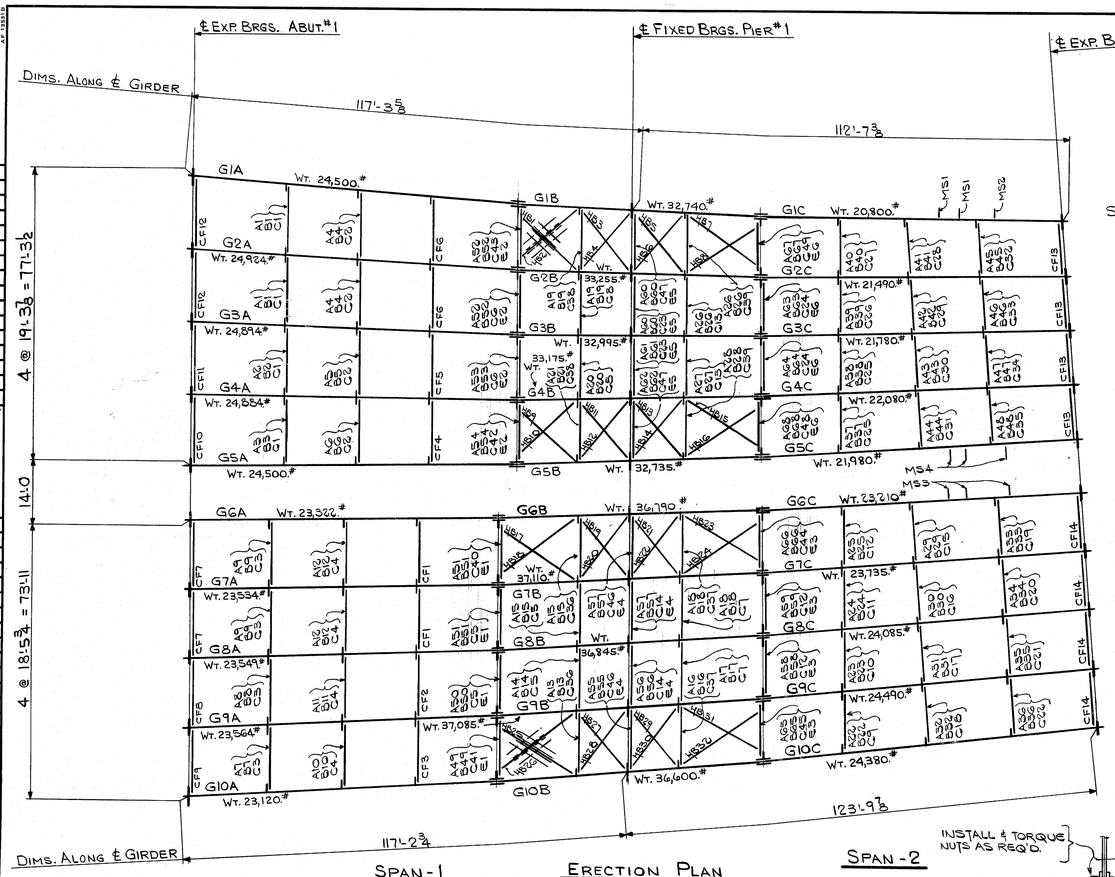

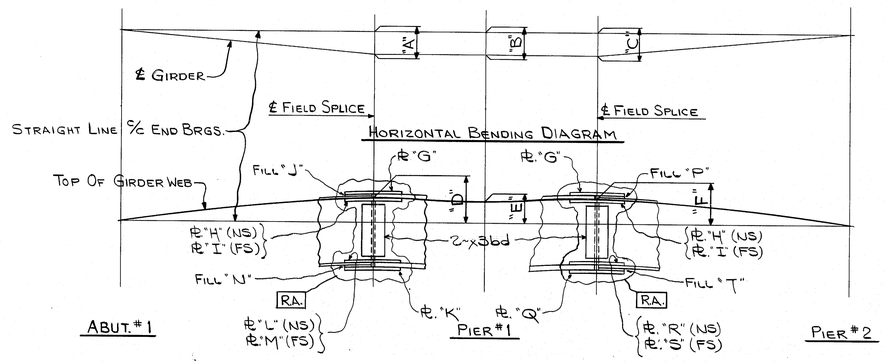

REAM ASSEMBLY DIAGRAM

GIRDER	"A"	"B"	"C"	"D"	"E"	"F"	"G"	"H"	"I"	"J"	"K"	"L"	"M"	"N"	"P"	"Q"	"R"	"S"	"T"
G1	3'-1 11/16"	3'-0 15/16"	2'-11 7/8"	4 1/2"	3 5/8"	4 1/16"	x3a	x3b	x3c	x3d	x3ac	x3ab	x3aa	x3ad	x3t	x3ae	x3ab	x3ag	x3be
G2	2'-11 3/8"	2'-11"	2'-10 1/16"	4 1/16"	3 4"	3 5/8"	x3a	x3b	x3c		x3ah	x3ag	x3af		x3t	x3ah	x3ag	x3af	x3bb
G3	2'-9"	2'-8 15/16"	2'-8 5/16"	4 3/8"	3 4"	3 5/8"	x3a	x3b	x3c		x3ah	x3ag	x3af		x3t				
G4	2'-6 4"	2'-6 3/8"	2'-6 1/16"	3 5/8"	2 15/16"	3 5/8"	x3f	x3g	x3h		x3ah	x3ag	x3af		x3w				
G5	2'-3 3/8"	2'-3 5/8"	2'-3 5/8"	4 1/16"	3 5/8"	4 3/8"				x3d	x3an	x3am	x3ak	x3ad	x3w				
G6	2'-2 15/16"	2'-3 5/8"	2'-4 5/16"	4 3/8"	3 3/4"	4 1/2"				x3k				x3ap	x3y				
G7	2'-3 5/8"	2'-3 5/8"	2'-4 1/16"	5 1/16"	4 5/16"	5 1/2"													
G8	2'-3 4"	2'-3 15/16"	2'-4 5/8"	6 5/8"	6 1/16"	6 9/16"													
G9	2'-3 5/8"	2'-3 5/8"	2'-4 1/2"	7 4"	6 1/2"	7 5/8"										x3ah	x3ag	x3af	x3bb
G10	2'-3 1/16"	2'-3 5/8"	2'-4 1/16"	7 5/16"	6 9/16"	7 5/8"	x3f	x3g	x3h	x3k	x3an	x3am	x3ak	x3ap	x3y	x3an	x3am	x3ak	x3bc

FIELD BOLT SUMMARY

HIGH STRENGTH (A325 TYPE 3) BOLTS W/HVY. HEX. HD. & A563 GRADE C3 HVY. HEX. NUT

1045 - 3/4"ϕ H.S. BOLTS	x 0'-2" LG.
1230 -	x 0'-2 1/4" LG.
320 -	x 0'-2 1/2" LG.
135 -	x 0'-2 3/4" LG.
1730 -	x 0'-3" LG.
135 -	x 0'-3 1/4" LG.
20 -	x 0'-3 1/2" LG.
420 -	x 0'-4 1/4" LG.
335 -	x 0'-4 3/4" LG.
335 - 3/4"ϕ H.S. BOLTS	x 0'-5" LG.

5705 - HARD. FLAT WASH. FOR 3/4"ϕ H.S. BOLTS (F436 WEATHERING)

NOTES:

1. ALL DIMENSIONS ARE GIVEN HORIZONTALLY.
2. ALL STEEL TO BE A588 (U.N.) UNPAINTED.
3. ALL FIELD CONNECTIONS ARE TO BE MADE WITH 7/8"ϕ H.S. BOLTS A325 TYPE-3.
4. FOR BEARING ASSEMBLIES SEE DWG. E1.
5. STUD SHEAR CONNECTORS, EXPANSION DAM MATERIAL, AND CATWALK FRAMING NOT BY H.S.S. INC.
6. FOR GENERAL NOTES SEE DWG. N1.
7. BOLTS FOR GUSSET CHANNELS TO BE TORQUED IN FIELD.

HANDRAIL TERMINATION

75 - HVY. HEX. NUTS FOR 1"ϕ H.S. BOLTS (A563 GR. C3)
75 - HARD. FLAT WASH. FOR 1"ϕ H.S. BOLTS (F436 WEATHERING)
} FOR HANDRAIL AT FIELD SPLICES

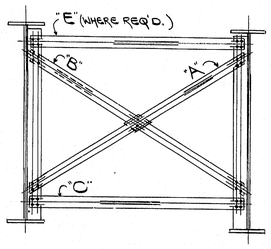

CROSSFRAME SECTION

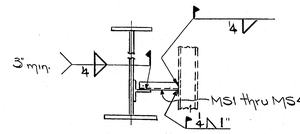

FIELD WELD FOR SCUPPER ANGLES

R95-106

ERECTION NOTE:

No credit will be allowed for work performed by others in replacing or correcting materials or workmanship covered by this drawing unless expressly authorized by High Steel Structures, Inc.

NO.	REVISION	DATE
1	Contract revision control # 14	9-10-84

HIGH STEEL STRUCTURES, INC.
1905 Old Philadelphia Pike
Lancaster, Pennsylvania 17603
Phone 717/299-5211
A Subsidiary of High Industries, Inc.

ERECTION PLAN
I-395 BRIDGE OVER PENOBSCOT RIVER
I-395 BRIDGE STA. 164+60.00
PENOBSCOT COUNTY
STATE OF MAINE
DEPARTMENT OF TRANSPORTATION

STATE CONTRACT OR REF. NO. 6 CONTRACTOR CIANBRO CORP.
IN CHARGE: HINKLE MADE BY: J.L.C. CHK.D. BY: G.F.Z. DATE: 7-6-84
CONTRACT NUMBER ME-84088-1 DRAWING NUMBER E2

FED. ROAD DIV. NO.	STATE	FED. AID PROJ. NO.
1	ME	IIG-395-8(82)17C

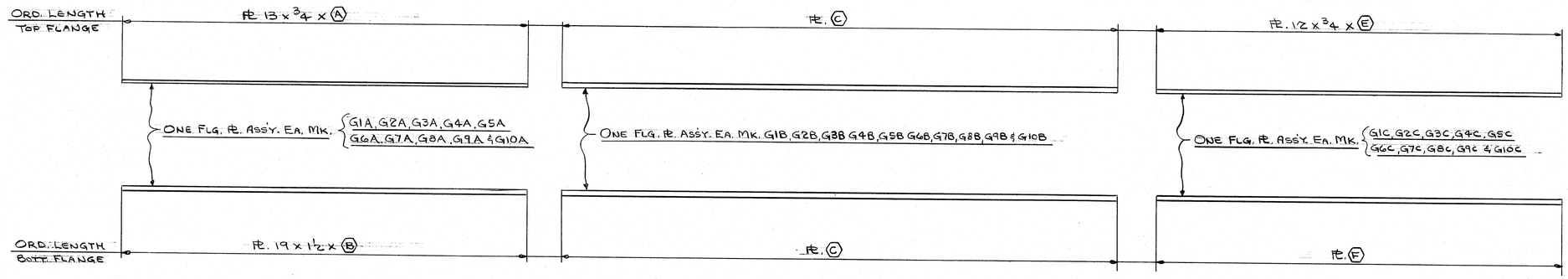

MARK	(A)	(B)
G1A	88'-4 1/16	88'-5 1/2 1/18
G2A		
G3A		
G4A		
G5A	88'-4 1/16	88'-5 1/2 1/18
G6A	83'-3 1/17	83'-4 1/2 1/19
G7A		
G8A		
G9A		
G10A	83'-3 1/17	83'-4 1/2 1/19

MARK	(C)
G1B	27 x 1 5/8 x 65'-2 1/20
G2B	
G3B	
G4B	
G5B	27 x 1 5/8 x 65'-2 1/20
G6B	27 x 1 3/4 x 70'-2 1/21
G7B	
G8B	
G9B	
G10B	27 x 1 3/4 x 70'-2 1/21

MARK	(E)	(F)
G1C	78'-11 1/2 1/22	18 x 1 3/8 x 78'-9 2/2
G2C	80'-0 1/2 1/23	18 x 1 3/8 x 79'-10 1/2 2/3
G3C	81'-2 1/2 1/24	18 x 1 3/8 x 81'-0 2/4
G4C	82'-4 1/2 1/25	18 x 1 3/8 x 82'-2 1/2 2/5
G5C	83'-7 1/2 1/26	18 x 1 3/8 x 83'-5 1/2 2/6
G6C	84'-9 1/27	18 x 1 1/2 x 84'-6 1/2 2/7
G7C	86'-1 1/28	18 x 1 1/2 x 85'-10 1/2 2/8
G8C	87'-5 1/29	18 x 1 1/2 x 87'-2 1/2 2/9
G9C	88'-9 1/2 1/30	18 x 1 1/2 x 88'-7 2/10
G10C	90'-1 1/2 1/31	18 x 1 1/2 x 89'-11 1/2 2/11

NOTES:

FOR GENERAL NOTES, SEE DWG. N1.
ALL STEEL TO BE A.S.T.M. A588
WITH CHARPY V-NOTCH TEST REQ'D.

R95-107

CODE: 4000

NO.	REVISION	DATE

HIGH STEEL STRUCTURES, INC.
1905 Old Philadelphia Pike
Lancaster, Pennsylvania 17603
Phone 717/299-5211
A Subsidiary of High Industries, Inc.

FLANGE PLATE DETAILS
I-395 BRIDGE OVER PENOBSCOT RIVER
I-395 BRIDGE STA. 164+60.00
PENOBSCOT COUNTY
STATE OF MAINE
DEPARTMENT OF TRANSPORTATION

STATE CONTRACT OR REF. NO. 6 CONTRACTOR CIANBRO CORP.
IN CHARGE: HINKLE MADE BY: G.F.Z. CHK.D. BY: BJK DATE: 5-10-84
CONTRACT NUMBER: ME-84088-1 DRAWING NUMBER: FS1

© mylar POLYTRACE® 528

FED. ROAD DIV. NO.	STATE	FED. AID PROJ. NO.
1	ME	I-IG-395-8(82)176

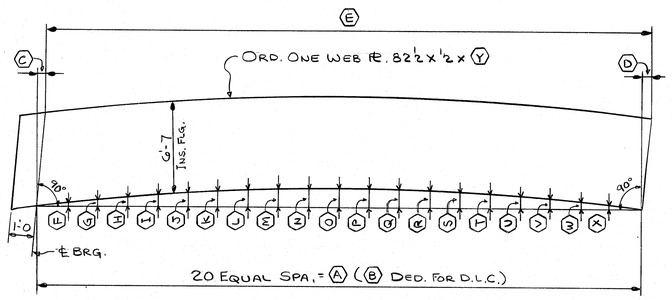

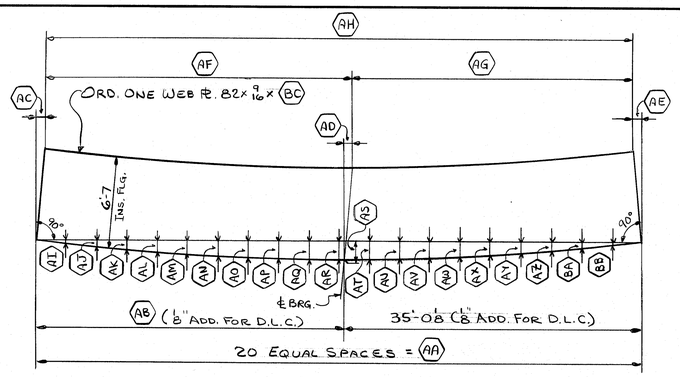

Mk.	A	B	C	D	E	F	G	H	I	J	K	L	M	N	O	P	Q	R	S	T	U	V	W	X	Y
G1A	87'-3 5/8	7/16	1 15/16	9/16	87'-2¼	3/8	¾	1 1/16	1 3/8	1 5/8	1 13/16	2	2 1/16	2'-8	2 3/16	2'-8	2 1/16	1 15/16	1¾	1 9/16	1 5/8	1"	11/16	3/8	88'-6(1/3)
G2A	87'-1 7/16	↑	1 13/16	5/8	87'-0¼	↑	↑	↑	↑	↑	↑	↑	↑	↑	↑	↑	↑	↑	↑	↑	↑	↑	↑	↑	↑
G3A	87'-0 3/16	↓	1 1/16	9/16	86'-11 1/16	↓	↓	↓	↓	↓	↓	↓	↓	↓	↓	↓	↓	↓	↓	↓	↓	↓	↓	↓	↓
G4A	86'-11 9/16	↑	1/2	↑	86'-10 5/8	↑	↑	↑	↑	↑	↑	↑	↑	↑	↑	↑	↑	↑	↑	↑	↑	↑	↑	↑	↑
G5A	86'-11 13/16	7/16	1 5/8	↓	86'-10¾	3/8	¾	1 1/16	1 3/8	1 5/8	1 13/16	2	2 1/16	2'-8	2 3/16	2'-8	2 1/16	1 15/16	1¾	1 9/16	1 5/8	1"	11/16	3/8	88'-6(1/3)
G6A	81'-11 13/16	3/8	1 1/16	9/16	81'-10 11/16	5/16	5/8	7/8	1 1/8	1 3/8	1 9/16	1 11/16	1 13/16	1 7/8	1 7/8	1 7/8	1 13/16	1 11/16	1½	1 5/16	1 1/8	7/8	5/8	5/16	83'-6(1/4)
G7A	82'-0 3/16	↑	1 13/16	11/16	81'-11 1/16	3/8	¾	1 1/16	1 5/16	1 9/16	1¾	1 15/16	2	2'-8	2'-8	2'-8	2 1/16	1 15/16	1¾	1 9/16	1 5/16	1"	11/16	3/8	↑
G8A	82'-0 15/16	↓	2	11/16	81'-11 5/8	1/2	7/8	1¼	1 9/16	1 13/16	2	2 3/16	2 5/16	2 3/8	2 3/16	2 1/16	2 3/8	2¼	2 1/16	1 13/16	1½	1 3/16	13/16	7/16	↓
G9A	82'-1¾	↑	2	11/16	82'-0 7/16	1/2	7/8	1¼	1 9/16	1 13/16	2	2 3/16	2 5/16	2 3/8	2 3/16	2 1/16	2 3/8	2¼	2 1/16	1 13/16	1½	1 3/16	13/16	7/16	↑
G10A	82'-2 11/16	3/8	2	11/16	82'-1 3/8	1/2	7/8	1¼	1 7/16	1 13/16	2	2 3/16	2 5/16	2 3/8	2 3/16	2 1/16	2 3/8	2¼	2 1/16	1 13/16	1½	1 3/16	13/16	7/16	83'-6(1/4)

Mk.	AA	AB	AC	AD	AE	AF	AG	AH	AI	AJ	AK	AL	AM	AN	AO	AP	AQ	AR	AS	AT	AU	AV	AW	AX	AY	AZ	BA	BB	BC
G1B	65'-0¼	30'-0⅛	3/16	2 3/16	⅛	30'-2⅛	34'-9 13/16	64'-11 15/16	⅛	¼	3/8	½	5/8	¾	13/16	⅞	15/16	15/16	15/16	⅞	13/16	¾	⅝	9/16	7/16	5/16	3/16	1/16	65'-2 11/16
G2B	↑	↑	↑	2 1/16	↑	30'-2	34'-9 15/16	64'-11 15/16	⅛	¼	3/8	½	5/8	¾	13/16	⅞	15/16	15/16	15/16	⅞	13/16	¾	↑	9/16	↑	↑	↑	1/16	↑
G3B	↓	↓	↓	⅞	↓	30'-1 13/16	34'-10⅛	↓	⅛	¼	3/8	½	5/8	¾	13/16	⅞	15/16	15/16	15/16	⅞	13/16	¾	↓	9/16	↓	↓	↓	1/16	↓
G4B	↑	↑	↑	1¾	↑	30'-1 1/16	34'-10¼	↑	1/16	3/16	5/16	3/8	½	5/8	11/16	¾	¾	¾	¾	¾	¾	11/16	↑	½	↑	↑	↑	1/8	↑
G5B	65'-0¼	30'-0⅛	↓	1 13/16	⅛	30'-1¾	34'-10 3/16	64'-11 15/16	↓	↓	↓	↓	↓	↓	↓	↓	↓	↓	↓	↓	↓	↓	↓	↓	↓	↓	↓	↓	65'-2 11/16
G6B	70'-0 5/16	35'-0 1/16	↑	1 13/16	3/16	35'-1⅛	34'-10⅛	69'-11 15/16	↑	↑	↑	↑	↑	↑	↑	↑	↑	↑	↑	↑	↑	↑	↑	↑	↑	↑	↑	↑	70'-2 1/16
G7B	↑	↑	3/16	1⅞	3/16	35'-1⅞	34'-10 1/16	69'-11 15/16	↑	3/16	5/16	3/8	½	5/8	11/16	¾	¾	¾	¾	¾	¾	11/16	5/8	½	7/16	5/16	↑	⅛	↑
G8B	↑	↑	⅛	1⅞	⅛	35'-1 15/16	34'-10⅛	70'-0 1/16	↑	⅛	¼	5/16	3/8	7/16	½	9/16	5/8	11/16	11/16	5/8	5/8	9/16	9/16	7/16	3/8	¼	↑	1/16	↑
G9B	↓	↓	⅛	1⅞	⅛	35'-1 15/16	34'-10⅛	70'-0 1/16	↓	⅛	¼	5/16	3/8	7/16	½	9/16	5/8	11/16	11/16	5/8	5/8	9/16	9/16	7/16	3/8	¼	↓	1/16	↓
G10B	70'-0 5/16	35'-0 3/16	⅛	1 15/16	⅛	35'-1⅞	34'-10 3/16	70'-0 1/16	1/16	⅛	¼	5/16	3/8	7/16	½	9/16	5/8	11/16	11/16	5/8	5/8	9/16	9/16	7/16	3/8	¼	3/16	1/16	70'-2 1/16

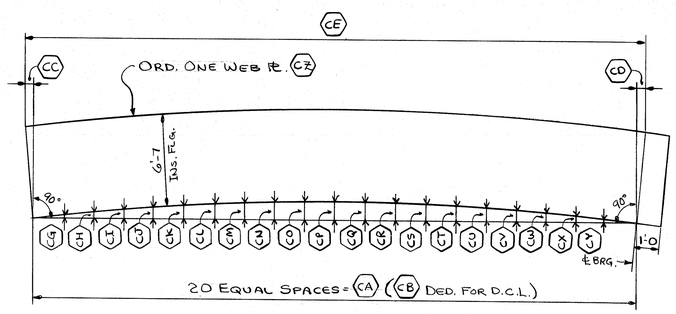

Mk.	CA	CB	CC	CD	CE	CG	CH	CI	CJ	CK	CL	CM	CN	CO	CP	CQ	CR	CS	CT	CU	CV	CW	CX	CY	CZ
G1C	77'-7¼	¼	7/16	2'-8	77'-9 13/16	¼	½	11/16	⅞	1 1/16	1 3/16	1 5/16	1 3/8	1 7/16	½	1 7/16	1 7/16	1 5/16	¼	1 1/16	⅞	11/16	½	¼	
G2C	78'-8 5/8	¼	3/8	2	78'-11	↑	7/16	5/8	13/16	15/16	1 1/16	1⅛	1 3/16	¼	¼	1 3/16	1⅛	1 1/16	15/16	13/16	11/16	9/16	3/8	3/16	81½ x ½ x 81'-3 (1/7)
G3C	79'-10 7/16	5/16	↑	1 15/16	80'-0¾	↓	7/16	5/8	13/16	15/16	1 1/16	1⅛	1 3/16	¼	¼	1 3/16	1⅛	1 1/16	15/16	13/16	11/16	9/16	3/8	3/16	
G4C	81'-0 11/16	5/16	↓	1⅞	81'-2 15/16	↑	7/16	5/8	13/16	15/16	1 1/16	1⅛	1 3/16	¼	¼	1 3/16	1⅛	1 1/16	15/16	13/16	11/16	9/16	3/8	3/16	81½ x ½ x 83'-8 (1/12)
G5C	82'-3 11/16	5/16	3/8	1⅞	82'-5 15/16	¼	½	11/16	⅞	1 1/16	1 3/16	1 5/16	1 3/8	1 7/16	½	1 7/16	1 7/16	1 5/16	¼	1 1/16	⅞	11/16	½	¼	
G6C	83'-4 7/8	3/8	½	1 15/16	83'-7 7/16	5/16	9/16	13/16	1 1/16	1¼	1 1/16	1 9/16	1 11/16	1¾	1¾	1¾	1½	1⅝	1 7/16	1 5/16	1 1/16	13/16	9/16	5/16	82 x ½ x 86'-1½ (1/8)
G7C	84'-8 13/16	↑	9/16	1⅞	84'-11¼	5/16	5/8	⅞	1⅛	1⅜	1 9/16	1 11/16	1 13/16	1⅞	1⅞	1⅞	1 13/16	1 11/16	1 9/16	1⅜	1⅛	⅞	5/8	5/16	
G8C	86'-0⅞	↓	5/8	1⅞	86'-3⅜	5/16	5/8	⅞	1⅛	1⅜	1 9/16	1 11/16	1 13/16	1⅞	1⅞	1⅞	1 13/16	1 11/16	1 9/16	1⅜	1⅛	⅞	5/8	5/16	82 x ½ x 87'-5½ (1/9)
G9C	87'-5⅛	↑	11/16	1⅞	87'-7 11/16	7/16	¾	1 1/16	1⅜	1⅝	1 13/16	1 15/16	2 1/16	2 3/16	2 5/16	2 3/16	2⅛	2	1 13/16	1⅝	1 5/16	1 1/16	11/16	3/8	82½ x ½ x 88'-10 (1/10)
G10C	88'-9 9/16	3/8	5/8	1 13/16	89'-0	7/16	¾	1 1/16	1⅜	1⅝	1 13/16	1 15/16	2 1/16	2 3/16	2 3/16	2 3/16	2⅛	2	1 13/16	1⅝	1 5/16	1 1/16	11/16	3/8	82½ x ½ x 90'-2 (1/11)

NOTES:

FOR GENERAL NOTES, SEE DWG. N1.
ALL STEEL TO BE A.S.T.M. A588
WITH CHARPY V-NOTCH TEST REQ'D.
SHOP INSPECTION BY MAINE D.O.T.
OR THEIR REPRESENTATIVE.

R95-108

CODE: 4000

NO.	REVISION	DATE

HIGH STEEL STRUCTURES, INC.
1905 Old Philadelphia Pike
Lancaster, Pennsylvania 17603
Phone 717/299-5211
A Subsidiary of High Industries, Inc.

WEB CAMBER DIAGRAM
I-395 BRIDGE OVER PENOBSCOT RIVER
I-395 BRIDGE STA. 164+60.00
PENOBSCOT COUNTY
STATE OF MAINE
DEPARTMENT OF TRANSPORTATION

STATE CONTRACT OR REF. NO. 6 CONTRACTOR CIANBRO CORP.
IN CHARGE: HINKLE MADE BY: G.F.Z. CHK.D. BY: BJK DATE: 5-10-84
CONTRACT NUMBER ME-84088-1 DRAWING NUMBER WC1

AF 13331B

© Bmar POLYTRACE 038

FED. ROAD DIV. NO.	STATE	FED. AID PROJ. NO.
1	ME	I-IG-395-8(82)116

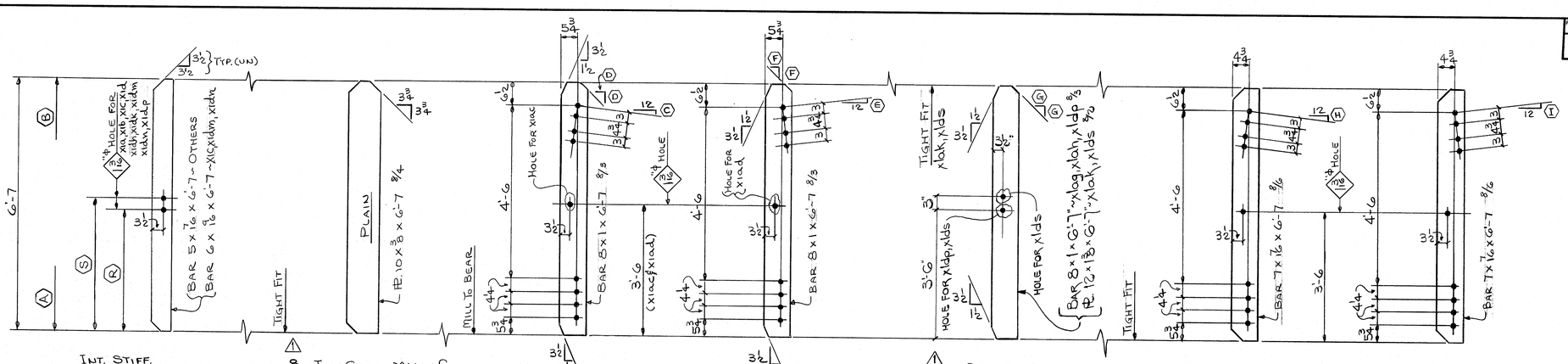

INT. STIFF.

8 ~ INT. STIFF. ~ MK. x1f

REQ'D.	MARK	(A)	(B)	(R)	(S)	Item
60	x1a	TIGHT FIT	—	3'-6	—	8/8
19	x1dh	—	—	—	3'-9	8/8
30	x1b	TIGHT FIT	TIGHT FIT	3'-6	—	8/9
23	x1dk	—	TIGHT FIT	—	3'-9	8/9
15	x1c	—	TIGHT FIT	3'-6	—	8/7
20	x1dm	—	TIGHT FIT	—	3'-9	8/7
10	x1d	—	TIGHT FIT	3'-6	—	8/8
5	x1dp	—	TIGHT FIT	—	3'-9	8/8
25	x1af	TIGHT FIT	—	—	—	8/8
5	x1dn	—	TIGHT FIT	3'-6	3'-9	8/7

BRG. STIFF.

REQ'D.	MARK	(C)	(D)
ONE	x1g	9/16	1¾
ONE	x1k	½	↕
2	x1n	⅜	↕
ONE	x1s	5/16	↕
ONE	x1w	⅝	↕
2	x1aa	11/16	1¾
8	x1ac	9/16	2¼

BRG. STIFF.

REQ'D	MARK.	(E)	(F)
ONE	x1h	9/16	1¾
ONE	x1m	½	↕
2	x1p	⅜	↕
ONE	x1t	5/16	↕
ONE	x1y	⅝	↕
2	x1ab	11/16	1¾
8	x1ad	9/16	2¼

BRG. STIFF.

REQ'D	MARK	(G)
4	x1ag	1¾
3	x1ah	2¼
3	x1ak	—
ONE	x1dp	2¼
ONE	x1ds	—

INT. STIFF.

REQ'D.	MARK	(H)
2	x1am	9/16
3	x1ap	½
ONE	x1at	⅜
2	x1ay	⅝

INT. STIFF.

REQ'D.	MARK	(I)
2	x1an	9/16
3	x1as	½
ONE	x1aw	⅜
2	x1ba	⅝

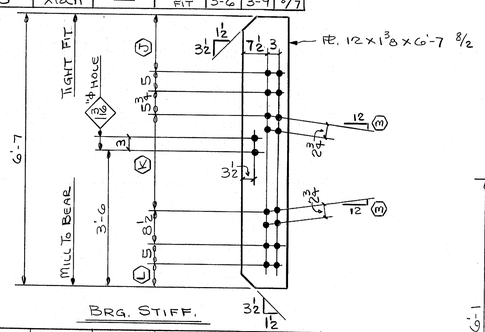

BRG. STIFF.

REQ'D.	MARK	(J)	(K)	(L)	(M)
ONE	x1bb	1'-2⅛	2'-9⅛	7½	2 1/16
↕	x1bc	5	2'-9⅛	1'-4⅝	2 1/16
↕	x1bd	1'-1¾	2'-9½	7½	2⅛
ONE	x1bf	5	2'-9½	1'-4¼	↕
2	x1bg	1'-1½	2'-9¾	7½	↕
2	x1bh	5	2'-9¾	1'-4	2⅛
ONE	x1bk	1'-0¼	2'-11	7½	2 5/16
↕	x1bm	5	2'-11	1'-2¾	2 5/16
↕	x1bn	1'-1⅞	2'-9⅜	7½	2 3/16
ONE	x1bp	5	2'-9⅜	1'-4⅜	2 3/16
2	x1bs	1'-3	2'-8¼	7½	2⅛
2	x1bt	5	2'-8¼	1'-5½	2⅛

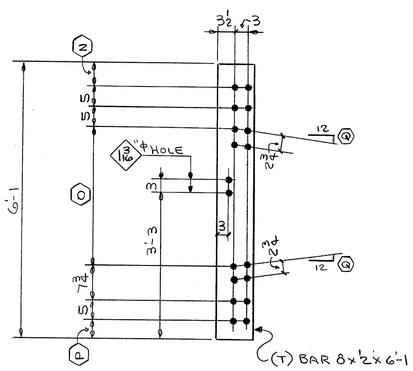

CONN. STIFF.

SEE SCHEDULE @ RIGHT

REQ'D.	MARK	(N)	(O)	(P)	(Q)
ONE	x1bw	1'-0⅜	2'-9⅜	4½	2
↕	x1by	2¾	2'-9⅜	1'-2⅛	↕
↕	x1ca	1 1/8	2'-10	4½	↕
ONE	x1cb	2¾	2'-10	1'-1½	2
2	x1cc	11	2'-10¾	4½	2 1/16
2	x1cd	2¾	2'-10¾	1'-0¾	2 1/16
ONE	x1cf	9½	3'-0¼	4½	2 3/16
↕	x1cg	2¾	3'-0¼	11¼	2 3/16
↕	x1ch	11⅞	2'-9⅞	4½	2 1/16
ONE	x1ck	2¾	2'-9⅞	1'-1⅝	2 1/16
2	x1cm	1'-1	2'-8¾	4½	2
↕	x1cn	2¾	2'-8¾	1'-2¾	2
↕	x1cp	11⅞	2'-9⅞	4½	2⅛
↕	x1cs	2¾	2'-9⅞	1'-1⅝	↕
↕	x1ct	11½	2'-10¼	4½	↕
2	x1cw	2¾	2'-10¼	1'-1¼	2⅛
ONE	x1cy	10¼	2'-11½	4½	2 5/16
ONE	x1da	2¾	2'-11½	1'-0	2 5/16
2	x1db	11⅝	2'-10⅝	4½	2¼
2	x1dc	2¾	2'-10⅝	1'-1⅜	↕
ONE	x1dd	11⅛	2'-10⅝	4½	↕
ONE	x1df	2¾	2'-10⅝	1'-0⅞	2¼

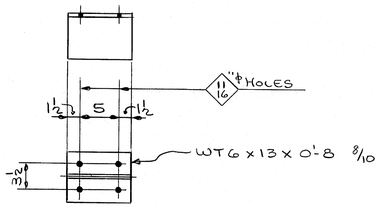

9 ~ SCUPPER CONN. ~ MK. x1dg

SHOP NOTE

HOLES: 15/16" ϕ (U.N.)
BOLTS: NONE
PAINT: NONE

FOR GENERAL NOTES, SEE DWG. N1.
ALL STEEL TO BE A.S.T.M. A588.
(T) INDICATES CHARPY-V NOTCH TEST REQ'D

NO.	REVISION	DATE
1	contract revision control # 14	9-10-84

HIGH STEEL STRUCTURES, INC.
1905 Old Philadelphia Pike
Lancaster, Pennsylvania 17603
Phone 717/299-5211
A Subsidiary of High Industries, Inc.

JOB STANDARDS
I-395 BRIDGE OVER PENOBSCOT RIVER
I-395 BRIDGE STA. 164+60.00
PENOBSCOT COUNTY
STATE OF MAINE
DEPARTMENT OF TRANSPORTATION

STATE CONTRACT OR REF. NO. 6 CONTRACTOR CIANBRO CORP.
IN CHARGE: HINKLE MADE BY: G.F.Z. CHK.D. BY: JLC DATE: 5-23-84
CONTRACT NUMBER: ME-84088-1 DRAWING NUMBER: X1

R95-109

CODE: 4000

FED. ROAD DIV. NO.	STATE	FED. AID PROJ. NO.
1	ME	HIG-395-B(82)176

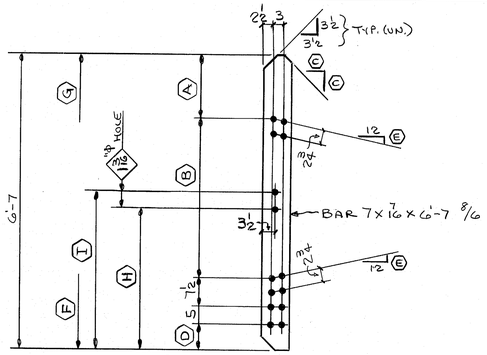

INT. CONN. PS.

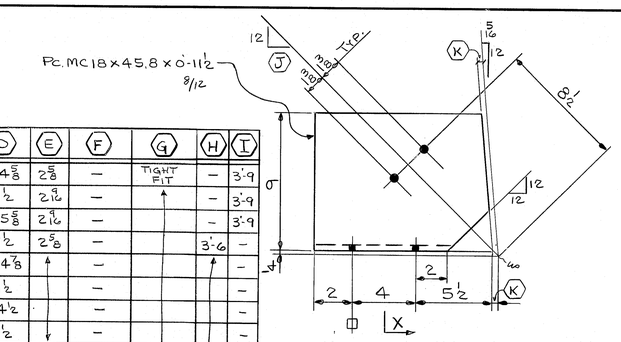

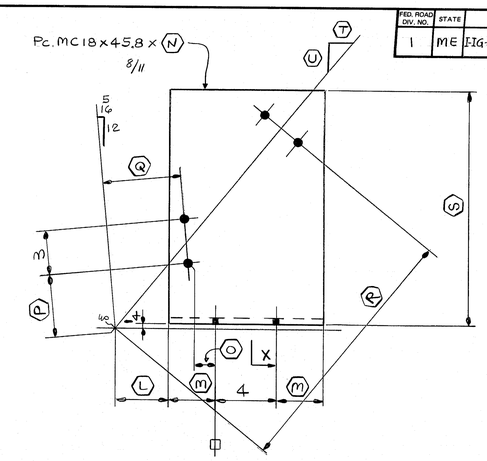

REQ'D.	MARK	J	K
ONE	X2fg	11 15/16	¼
ONE	X2fh	10⅜	¼
ONE	X2fk	10 9/16	11/16

REQ'D.	MARK	L	M	N	O	P	Q	R	S	T	U
ONE	X2fm	3½	3⅛	10¼	1½	4¼	5¼	1'-5¼	1'-3½	9 13/16	12
ONE	X2fn	3½	2⅞	9¾	1¼	4¼	5¼	1'-1¼	10¼	12	8 13/16
ONE	X2fp	3⅜	3¾	11½	1 11/16	9¼	5 11/16	1'-6¾	1'-4¾	10	12

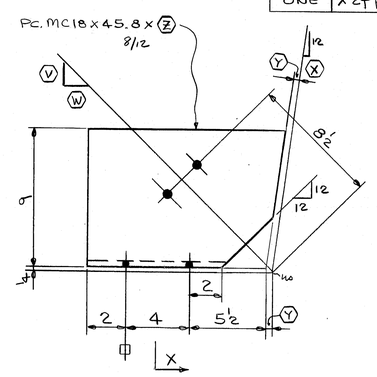

SEE SCHEDULE @ RIGHT

REQ'D.	MARK.	V	W	X	Y	Z
ONE	X2fs	12	11 3/16	7/16	¼	11 13/16
	X2ft	9 1/16	12	9/16		11 15/16
	X2fw	9 15/16	12	1"		1'-0¼
	X2fy	12	9⅝	7/16		11 13/16
	X2ga		8⅞	9/16		11 15/16
	X2gb		8½	1"	¼	1'-0¼
	X2gc		9½	7/16	11/16	11 13/16
	X2gd		8 13/16	9/16	11/16	11 15/16
ONE	X2gf	12	8 7/16	1"	11/16	1'-0¼

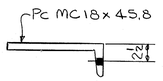

SECTION - X

REQ'D.	MARK	A	B	C	D	E	F	G	H	I
ONE	X2a	1'-4⅞	3'-6⅛	–	7½	2⅜	TIGHT FIT	–	3'-6	–
	X2b	6¾	3'-6⅛	–	1'-5⅝	2⅜		–		–
	X2c	1'-3⅝	3'-7⅜	–	7½	2 7/16		–		–
ONE	X2d	6¾	3'-7⅜	–	1'-4⅜	2 7/16		–		–
2	X2f	1'-2	3'-9	–	7½	2 9/16		–		–
2	X2g	6¾	3'-9	–	1'-2¾			–		–
ONE	X2h	1'-0½	3'-10½	–	7½			–		–
	X2k	6¾	3'-10½	–	1'-1¼	2 9/16		–		–
	X2m	1'-5¼	3'-5¾	–	7½	2 5/16		–		–
ONE	X2n	6¾	3'-5¾	–	1'-6	2 5/16		–		–
2	X2p	1'-6½	3'-4½	–	7½	2 3/16		–		–
2	X2s	6¾	3'-4½	–	1'-7¼	2 3/16		–		–
ONE	X2t	1'-4¾	3'-6¼	–	7½	2 7/16		–		–
	X2w	6¾	3'-6¼	–	1'-5½			–		–
	X2y	1'-3¾	3'-7¼	–	7½			–		–
ONE	X2aa	6¾	3'-7¼	–	1'-4½	2 7/16		–		–
2	X2ab	1'-2½	3'-8½	–	7½	2 9/16		–		–
2	X2ac	6¾	3'-8½	–	1'-3¼			–		–
ONE	X2ad	1'-0⅞	3'-10⅛	–	7½			–		–
	X2af	6¾	3'-10⅛	–	1'-1⅝	2 9/16		–		–
	X2ag	1'-4¾	3'-6¼	–	7½	2⅜		–		–
ONE	X2ah	6¾	3'-6¼	–	1'-5½	2⅜		–		–
2	X2ak	1'-6	3'-5	–	7½	2 5/16		–		–
2	X2am	6¾	3'-5	–	1'-6¾	2 5/16	TIGHT FIT	–	3'-6	–
ONE	X2an	1'-4⅜	3'-6⅝	–	7½	2 9/16	–	TIGHT FIT	–	3'-9
	X2ap	6¾	3'-6⅝	–	1'-5⅛		–		–	
	X2as	1'-3⅞	3'-7⅛	–	7½		–		–	
ONE	X2at	6¾	3'-7⅛	–	1'-4⅝	2 9/16	–		–	
2	X2aw	1'-3⅜	3'-7⅝	–	7½	2⅝	–		–	
2	X2ay	6¾	3'-7⅝	–	1'-4⅛	2⅝	–		–	
ONE	X2ba	1'-1⅞	3'-9⅛	–	7½	2¾	–		–	
ONE	X2bb	6¾	3'-9⅛	–	1'-2⅝	2¾	–		–	
ONE	X2bc	1'-3⅞	3'-7⅛	–	7½	2⅝	–	TIGHT FIT	–	3'-9

REQ'D.	MARK	A	B	C	D	E	F	G	H	I
ONE	X2bd	6¾	3'-7⅛	–	1'-4⅝	2⅝	–	TIGHT FIT	–	3'-9
2	X2bf	1'-4⅞	3'-6⅛	–	7½	2 9/16	–		–	3'-9
2	X2bg	6¾	3'-6⅛	–	1'-5⅝	2 9/16	–		–	3'-9
ONE	X2bh	1'-4⅛	3'-6⅞	–	7½	2⅝	–		3'-6	–
	X2bk	6¾	3'-6⅞	–	1'-4⅞		–			–
	X2bm	1'-3¾	3'-7¼	–	7½		–			–
ONE	X2bn	6¾	3'-7¼	–	1'-4½		–			–
2	X2bp	1'-3½	3'-7½	–	7½		–			–
2	X2bs	6¾	3'-7½	–	1'-4¼	2⅝	–			–
ONE	X2bt	1'-2⅛	3'-8⅞	–	7½	2 13/16	–			–
	X2bw	6¾	3'-8⅞	–	1'-2⅞	2 13/16	–			–
	X2by	1'-3⅜	3'-7⅝	–	7½	2¾	–			–
ONE	X2ca	6¾	3'-7⅝	–	1'-4⅛	2¾	–			–
2	X2cb	1'-4¼	3'-6¾	–	7½	2 11/16	–			–
2	X2cc	6¾	3'-6¾	–	1'-5		–	TIGHT FIT	3'-6	–
ONE	X2cd	1'-3⅞	3'-7⅛	1¼	7½		TIGHT FIT	–	–	3'-9
	X2cf	6¾	3'-7⅛		1'-4⅝			–	–	
	X2cg	1'-3¾	3'-7¼		7½			–	–	
ONE	X2ch	6¾	3'-7¼		1'-4½			–	–	
2	X2ck	1'-3⅝	3'-7⅜		7½			–	–	
2	X2cm	6¾	3'-7⅜		1'-4⅜	2 11/16		–	–	
ONE	X2cn	1'-2⅝	3'-8⅜		7½	2 15/16		–	–	
	X2cp	6¾	3'-8⅜		1'-3⅜			–	–	
	X2cs	1'-3	3'-8		7½			–	–	
ONE	X2ct	6¾	3'-8		1'-3¾	2 15/16		–	–	
2	X2cw	1'-3⅜	3'-7⅝		7½	2⅞		–	–	
2	X2cy	6¾	3'-7⅝		1'-4⅛	2⅞		–	–	
ONE	X2da	1'-3¾	3'-7¼		7½	2¾		–	3'-6	
ONE	X2db	6¾	3'-7¼		1'-4½			–		
2	X2dc	1'-3⅝	3'-7⅜		7½			–		
2	X2dd	6¾	3'-7⅜		1'-4⅜			–		
ONE	X2df	1'-3½	3'-7½		7½			–		
	X2dg	6¾	3'-7½		1'-4¼	2¾		–		
	X2dh	1'-2¾	3'-8¼		7½	3		–		
	X2dk	6¾	3'-8¼		1'-3½			–		
	X2dm	1'-2⅞	3'-8⅛		7½			–		
ONE	X2dn	6¾	3'-8⅛		1'-3⅝			–		
2	X2dp	1'-3	3'-8		7½			–		
2	X2ds	6¾	3'-8		1'-3¾	3		–		3'-9
3	X2dt	1'-3½	3'-7½		7½	2 13/16		–		–
3	X2dw	6¾	3'-7½		1'-4¼			–		–
ONE	X2dy	1'-3⅜	3'-7⅝		7½			–		–
ONE	X2fa	6¾	3'-7⅝		1'-4⅛	2 13/16		–		–
2	X2fb	1'-2¾	3'-8¼		7½	3 1/16		–		–
	X2fc	6¾	3'-8¼		1'-3½			–		–
	X2fd	1'-2½	3'-8½		7½			–		–
2	X2ff	6¾	3'-8½	1¼	1'-3¼	3 1/16	TIGHT FIT	–	3'-6	–

SHOP NOTE

HOLES: 15/16" ϕ (U.N.)
BOLTS: NONE
PAINT: NONE

FOR GENERAL NOTES, SEE DWG. N1.
ALL STEEL TO BE A.S.T.M. A588.

R95-110

CODE # 4000

NO.	REVISION	DATE

HIGH STEEL STRUCTURES, INC.
1905 Old Philadelphia Pike
Lancaster, Pennsylvania 17603
Phone 717/299-5211
A Subsidiary of High Industries, Inc.

JOB STANDARDS
I-395 BRIDGE OVER PENOBSCOT RIVER
I-395 BRIDGE STA. 164+60.00
PENOBSCOT COUNTY
STATE OF MAINE
DEPARTMENT OF TRANSPORTATION

STATE CONTRACT OR REF. NO. 6 CONTRACTOR CIANBRO CORP.
IN CHARGE: HINKLE MADE BY: G.F.X. CHK.D. BY: JLC DATE: 5-22-84
CONTRACT NUMBER: ME-84-088-1 DRAWING NUMBER: X2

FED. ROAD DIV. NO.	STATE	FED. AID PROJ. NO.
1	ME	I-IG-395-8(82)176

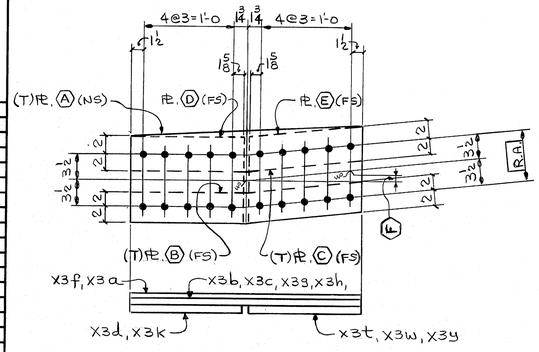

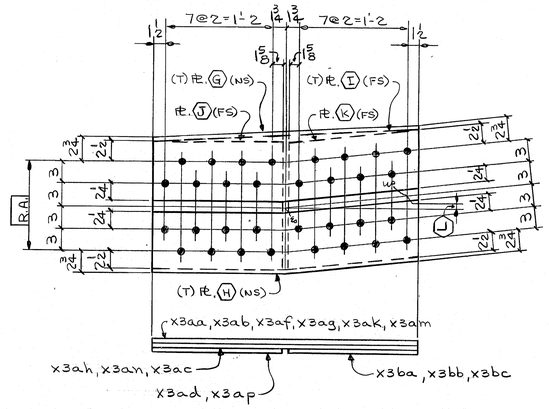

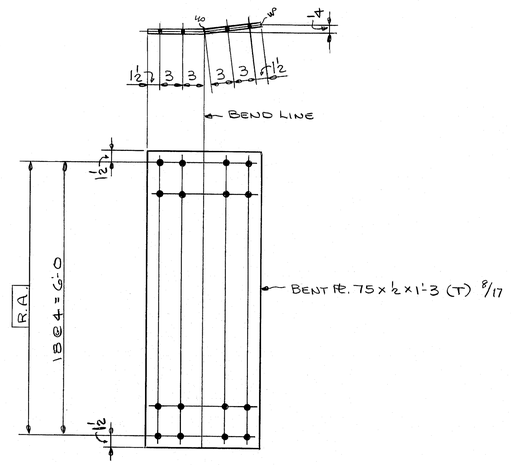

(DEVELOPED)

40 - SPLICE PCS. - MK X3bd

REQ'D.	MARK	A	B	C	D	E	F
6	X3a	11½x½x2'-6½ 8/18	—	—	—	—	½
6	X3b	—	4½x¾x2'-6½ 8/20	—	—	—	
6	X3c	—	—	4½x¾x2'-6½ 8/20	—	—	
5	X3d	—	—	—	11x⅞x1'-3⅜ 8/25	—	—
14	X3f	11⅜x½x2'-6½ 8/19	—	—	—	—	⅜
14	X3g	—	4⅜x¾x2'-6½ 8/21	—	—	—	
14	X3h	—	—	4⅜x¾x2'-6½ 8/21	—	—	
5	X3k	—	—	—	11x1"x1'-3⅜ 8/26	—	—
3	X3t	—	—	—	—	11½x⅞x1'-3⅜ 8/22	½
2	X3w	—	—	—	—	11⅜x⅞x1'-3⅜ 8/23	⅜
5	X3y	—	—	—	—	11⅜x1"x1'-3⅜ 8/24	

REQ'D.	MARK	G	H	I	J	K	L
2	X3aa	8⅝x1x2'-10½ 8/30	—	—	—	—	⅝
2	X3ab	—	8⅝x1x2'-10½ 3/30	—	—	—	
2	X3ac	—	—	17⅝x⅞x2'-10½ 8/27	—	—	
5	X3ad	—	—	—	17½x1x1'-5⅜ 3/21	—	—
11	X3af	8½x1x2'-10½ 8/31	—	—	—	—	½
11	X3ag	—	8½x1x2'-10½ 3/31	—	—	—	
11	X3ah	—	—	17½x⅞x2'-10½ 8/28	—	—	
7	X3ak	8⅜x1x2'-10½ 8/32	—	—	—	—	⅜
7	X3am	—	8⅜x1x2'-10½ 8/32	—	—	—	
7	X3an	—	—	17⅝x⅞x2'-10½ 8/29	—	—	
5	X3ap	—	—	—	17x¾x1'-5⅜ 3/20	—	—
ONE	X3ba	—	—	—	—	17⅝x¾x1'-5⅜ 3/17	⅝
8	X3bb	—	—	—	—	17½x¾x1'-5⅜ 3/18	½
ONE	X3bc	—	—	—	—	17⅝x¾x1'-5⅜ 3/19	⅜

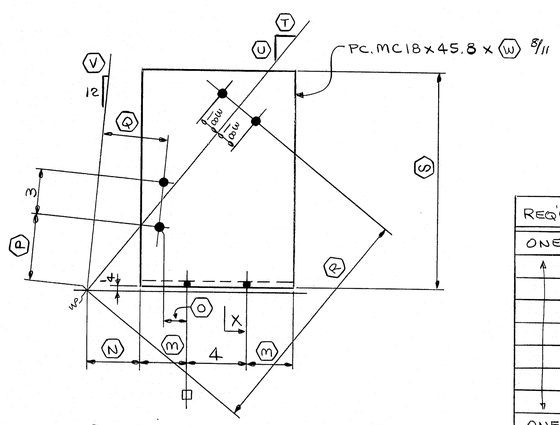

SEE SCHEDULE @ RIGHT

REQ'D.	MARK	M	N	O	P	Q	R	S	T	U	V	W
ONE	X3bg	3¼	3¾	1⅝	4¼	5¼	1'-5¾	1'-3½	10 9/16	12	7/16	10½
	X3bh	3⅛		1 7/16			1'-5¾	1'-3¾	10 1/16	12	9/16	10¼
	X3bk	3¼		1 7/16			1'-5¾	1'-3¾	10½	12	1"	10½
	X3bm			1⅝			1'-2½	11	12	8 7/16	7/16	
	X3bn			1 9/16			1'-2½	11	12	8 9/16	9/16	
	X3bp		3¾	1 7/16	4¼	5¼	1'-2½	11	12	8⅜	1"	
	X3bs		4½	1¾	9¼	5 11/16	1'-6½	1'-4¼	10¾	12	7/16	
	X3bt		4½	1⅝	9¼	5 11/16	1'-6½	1'-4¼	10⅛	12	9/16	
ONE	X3bw	3¼	4½	1 5/16	9¼	5 11/16	1'-6½	1'-4¼	10 9/16	12	1"	10½

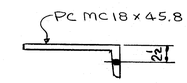

SECTION - X

SHOP NOTE

HOLES: 15/16" ϕ (UNO.)
BOLTS: NONE
PAINT: NONE

FOR GENERAL NOTES, SEE DWG. N1.
ALL STEEL TO BE A.S.T.M. A588.
(T) INDICATES CHARPY-V NOTCH TEST REQ'D.

R95-111

CODE : 4000

NO.	REVISION	DATE

HIGH STEEL STRUCTURES, INC.
1905 Old Philadelphia Pike
Lancaster, Pennsylvania 17603
Phone 717/299-5211
A Subsidiary of High Industries, Inc.

JOB STANDARDS
I-395 BRIDGE OVER PENOBSCOT RIVER
I-395 BRIDGE STA. 164+60.00
PENOBSCOT COUNTY
STATE OF MAINE
DEPARTMENT OF TRANSPORTATION

STATE CONTRACT OR REF. NO. 6 CONTRACTOR GANBRO CORP.
IN CHARGE: HINKLE MADE BY: G.F.X. CHK.D. BY: JLC DATE: 5-22-84
CONTRACT NUMBER: ME-84088-1 DRAWING NUMBER: X3

FED. ROAD DIV. NO.	STATE	FED. AID PROJ. NO.
1	ME	I-IG-395-8(82)116

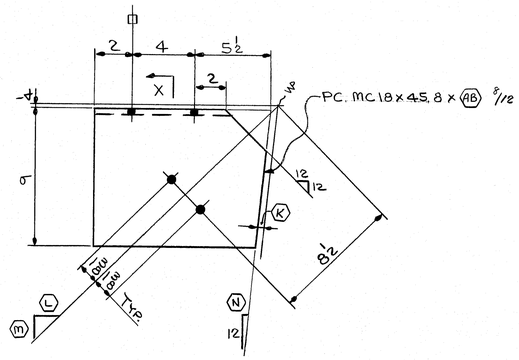

REQ'D.	MARK	Ⓚ	Ⓛ	Ⓜ	Ⓝ	Ⓐⓑ
ONE	X4a	11/16	10 1/8	12	3/16	11 7/16
	X4b	11/16	9 13/16		7/16	11 3/8
	X4c	11/16	10 1/4		7/8	11 1/4
	X4d	1/4	11 13/16	12	3/16	11 7/16
	X4f		12	9 1/8	7/16	11 3/8
	X4g		12	8 7/8	7/8	11 1/4
	X4h		10 5/16	12	3/16	11 7/16
	X4k		9 7/8	12	7/16	11 3/8
ONE	X4m	1/4	10 5/16	12	7/8	11 1/4

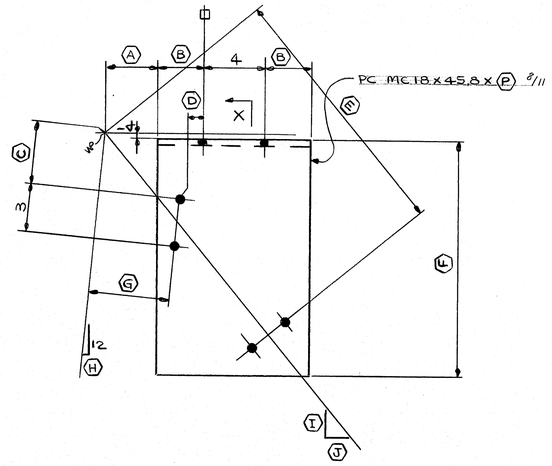

REQ'D.	MARK	Ⓐ	Ⓑ	Ⓒ	Ⓓ	Ⓔ	Ⓕ	Ⓖ	Ⓗ	Ⓘ	Ⓙ	Ⓟ
ONE	X4n	3	3	9 1/4	7/16	1'-4	1'-3 1/4	5 11/16	3/16	12	10 1/16	10
	X4p	3	3	9 1/4	3/8	1'-4	1'-3 1/4	5 11/16	7/16		9 1/8	10
	X4s	3	3	9 1/4	1"	1'-4	1'-3 1/4	5 11/16	7/8		8 11/16	10
	X4t	3 5/8	2 1/4	4 1/4	11/16	1'-3	1'-1 3/4	5 1/4	3/16		9 7/8	8 1/2
	X4w	3 1/2	2 1/8		1/2	1'-3	1'-2 1/4		7/16		9	8 1/4
	X4y	3 1/8	2 1/8		5/16	1'-3	1'-2 1/4		7/8	12	8 5/8	8 1/4
	X4aa	3 5/8	2 1/4		11/16	1'-0	9 1/2		3/16	8 3/4	12	8 1/2
	X4ab	3 1/2	2 1/4		5/8	1'-0	9 3/4		7/16	9 3/16	12	8 1/2
ONE	X4ac	3 1/4	2 1/4	4 1/4	9/16	1'-0	9 3/4	5 1/4	7/8	9 3/8	12	8 1/2

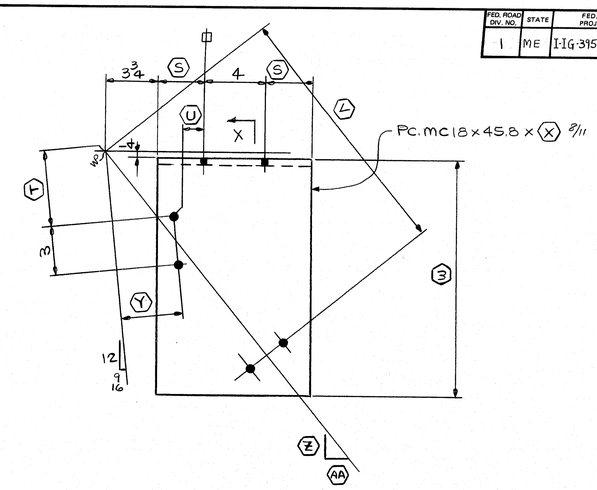

REQ'D.	MARK	Ⓢ	Ⓣ	Ⓤ	Ⓥ	Ⓦ	Ⓧ	Ⓨ	Ⓩ	Ⓐⓐ
ONE	X4ah	2 5/8	4 1/4	15/16	1'-3 1/2	1'-2	9 1/4	5 1/4	12	10 5/8
ONE	X4ak	2 1/4	4 1/4	9/16	1'-0	9 1/4	8 1/2	5 1/4	8 3/8	12
ONE	X4am	2 3/4	9 1/4	3/8	1'-4	1'-2 1/2	9 1/2	5 11/16	12	10 13/16

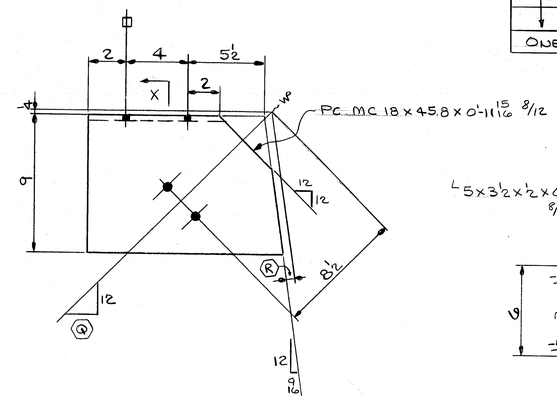

REQ'D	MARK	Ⓠ	Ⓡ
ONE	X4ad	11 1/8	1/4
ONE	X4af	9 9/16	1/4
ONE	X4ag	9 3/8	11/16

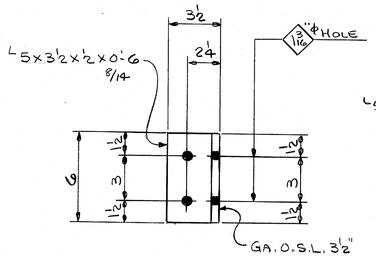

4 ~ ANGLE ~ MK. X4an

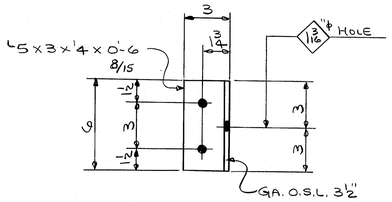

⊓ ~ ANGLE ~ MK. X4ap

SECTION ~ X

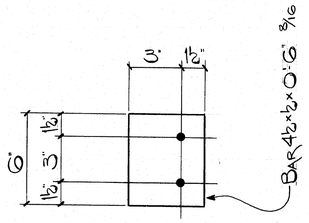

2-CONN. BARS ~ MK. X4as

SHOP NOTE

HOLES: 15/16" ϕ (U.N.)
BOLTS: NONE
PAINT: NONE

FOR GENERAL NOTES, SEE DWG. N1.
ALL STEEL TO BE A.S.T.M. A588.

R95-112 CODE: 4000

NO.	REVISION	DATE
6	changed quantities	12-14-84
1	contract revision control #14	9-10-84

HIGH STEEL STRUCTURES, INC.
1905 Old Philadelphia Pike
Lancaster, Pennsylvania 17603
Phone 717/299-5211
A Subsidiary of High Industries, Inc.

JOB STANDARDS
I-395 BRIDGE OVER PENOBSCOT RIVER
I-395 BRIDGE STA. 164+60.00
PENOBSCOT COUNTY
STATE OF MAINE
DEPARTMENT OF TRANSPORTATION

STATE CONTRACT OR REF. NO. 6 CONTRACTOR GANDRO CORP.
IN CHARGE: HINKLE MADE BY: G.F.X. CHK.D. BY: JLC DATE: 5-22-84
CONTRACT NUMBER: ME-84088-1 DRAWING NUMBER: X4

FED. ROAD DIV. NO.	STATE	FED.-AID PROJ. NO.
1	ME.	I-IG-395-8(82)176

GIRDERS "G"

	A	B	C
1	7	17	27
2	8	18	28
3	9	19	29
4	10	20	30
5	11	21	31
6	12	22	32
7	13	23	33
8	14	24	34
9	15	25	35
10	16	26	36

CROSSFRAMES "CF"

	0	1	2	3	4	5	6	7	8	9
0	X	2	←							→ 2
1	2	←			→ 2					
2										
3										
4										
5										
6										
7										
8										
9										

CROSSFRAMES (KNOCKED DOWN)

	0	1	2	3	4	5	6	7	8	9
0										
1	A1 thru A68 ~ DET'D. ON DWG. #3									
2										
3	B1 thru B48 ~ DET'D. ON DWG. #4									
4										
5	B49 thru B68 ~ DET'D. ON DWG. #5									
6										
7	C1 thru C49 ~ DET'D. ON DWG. #6									
8										
9	E1 thru E6 ~ DET'D. ON DWG. #5									

HORIZONTAL BRACING "HB"

	0	1	2	3	4	5	6	7	8	9
0										
1	HB1 thru HB52 ~ DET'D. ON DWG #5									
2										
3										
4										
5										
6										
7										
8										
9										

MISCELLANEOUS

	0	1	2	3	4	5	6	7	8	9
0										
1	ANCHOR BOLTS, WASHERS									
2	& FABRIC PADS ~ DET'D. ON DWG #1									
3										
4										
5	POT BRGS. ~ DET'D ON DWG #D-1001-1A									
6	thru 1F & D-1003-1A									
7	SCUPPER SUPPORT ANGLES									
8	M1, M2, M3 & M4 ~ DET'D. ON DWG #4									
9										

NO	REVISION	DATE

HIGH STEEL STRUCTURES, INC.

INDEX
I-395 BRIDGE OVER PENOBSCOT RIVER
I-395 BRIDGE STA. 164+60.00
PENOBSCOT COUNTY
STATE OF MAINE
DEPARTMENT OF TRANSPORTATION

STATE CONTRACT OR REF NO 6 CONTRACTOR CIANBRO CORP.

IN CHARGE HINKLE MADE BY CS CHK'D BY _____ DATE _____

CONTRACT NUMBER ME-84088-1 DRAWING NUMBER K1

R95-113

Print O.Sat

FED.ROAD DIV.NO.	STATE	FED.AID PROJ.NO.
1	ME.	I-IG-395-8(82)176

GENERAL SHOP NOTES

SPECIFICATIONS:
MAINE DEPARTMENT OF TRANSPORTATION STANDARD SPECIFICATIONS
HIGHWAYS AND BRIDGES (REVISION OF JUNE 1981)
AND SUPPLEMENTALS THERETO, EXCEPT AS MODIFIED ON THE
PLANS AND IN THE SPECIAL PROVISIONS.

MATERIAL:
UNLESS NOTED OTHERWISE, ALL STEEL TO BE ASTM A588, GRADE A, B, F OR G △2
(T) INDICATES CHARPY V-NOTCH TESTING REQUIRED.
SHOP BOLTS TO BE ASTM A325 TYPE 3 HEAVY HEX. HEAD.
WITH 1 A563 GR. C3 HEAVY HEX. NUT AND 1-F436 WEATHERING WASHER EACH.
HANDRAIL: NUTS: A563 GR. C3 HEX. NUT
WASHERS: F436 WEATHERING

SHOP PROCEDURE:
ALL FLANGE AND WEB PLATE BUTT WELDED SPLICES TO BE MADE BEFORE FINAL
FITTING AND WELDING INTO GIRDER.
CAMBER TOLERANCE: -0 TO +3/4
ALL RE-ENTRANT CUTS TO HAVE 3/4" MIN. RADIUS.
Φ INDICATES SET LINE.
NO DIE STAMPING ALLOWED ON ANY PART OF MAIN STRESS CARRYING MEMBERS.
ALL WEB AND FLANGE BUTT JOINTS SHALL BE GROUND SMOOTH PRIOR
TO TESTING AND FITTING.

INSPECTION:
SHOP INSPECTION BY: JERSEY TESTING LAB

WELDING:
ALL WELDING IS TO CONFORM TO AWS D1.1-80 AS MODIFIED BY THE 1981 AASHTO
SPECIFICATIONS, AND SUPPLEMENTAL SPECIFICATIONS, SECTION 504, STRUCTURAL STEEL WELDING.
NOTATIONS W1X, W2X, ETC. FOLLOWING WELDING SYMBOLS ON DETAIL DRAWINGS, REFER TO THE
CORRESPONDING WELDING PROCEDURE TO BE USED FOR THAT JOINT.

NON-DESTRUCTIVE TESTING:
FLANGE AND WEB PLATE SPLICES TO BE RADIOGRAPHICALLY TESTED, AS CALLED FOR ON
DRAWINGS PREFIXED 'FS' AND 'WC', BY A QUALIFIED TECHNICIAN.

MAGNETIC PARTICLE INSPECTION IS REQUIRED ON 10% OF ALL FILLET WELDS IN MAIN MEMBERS. (INCLUDING BEARINGS) △2
ALL TESTING TO BE DONE UNDER THE SUPERVISION OF MAINE DEPT. OF
TRANSPORTATION INSPECTION PERSONNEL.

REAMING:
HOLES MARKED RA ON DETAIL DRAWINGS TO BE SUB-PUNCHED 11/16" Ø AND REAMED TO
15/16" Ø WITH CONNECTING PARTS ASSEMBLED AND MATCH MARKED.

CLEANING: BLAST CLEAN TO SSPC-SP6. FLANGE TO WEB WELD AREAS TO BE
CLEANED TO SSPC-SP6 PRIOR TO WELDING.

PAINTING: NONE

DRAWING REFERENCE:

FLANGE SPLICES	-PREFIXED 'FS'
WEB CAMBERS	-PREFIXED 'WC'
GIRDER JOB STANDARDS	-PREFIXED 'X'
REAM ASSEMBLY	-DWG. 'E'
WELDING PROCEDURE	-DWG. 'WP'

NO.	REVISION	DATE
△2	ALTERED AS PER REVISION 10-11 APPV'L	10-17-84
△1	ALTERED AS PER 7-19 APPV'L	8-17-84

HIGH STEEL STRUCTURES, INC.
1905 Old Philadelphia Pike
Lancaster, Pennsylvania 17603
Phone 717/299-523
A Subsidiary of High Industries, Inc.

GENERAL SHOP NOTES
I-395 BRIDGE OVER PENOBSCOT RIVER
I-395 BRIDGE STA. 164+60.00
PENOBSCOT COUNTY
STATE OF MAINE
DEPARTMENT OF TRANSPORTATION

STATE CONTRACT OR REF.NO. 6 CONTRACTOR CIANBRO CORP.
IN CHARGE: HINKLE MADE BY: J.L.C. CHK.D. BY: J.C.H. DATE: 5-22-84
CONTRACT NUMBER: ME-84088-1,2,3 DRAWING NUMBER: N1

R95-114

FED.ROAD DIV.NO.	STATE	FED.AID PROJ.NO.
1	ME.	I-IG-395-8(82)176

WELDING PROCEDURE FOR AWS PREQUALIFIED JOINTS

W1ME

PROCEDURE SPECIFICATIONS

MATERIAL SPECIFICATION..... ASTM, A-36, A-572, A-441, A-588
WELDING PROCESS..... SHIELDED METAL ARC
MANUAL OR MACHINE..... MANUAL
POSITION OF WELDING..... 1F AND 2F (FLAT AND HORIZONTAL)
FILLER METAL SPECIFICATION..... AWS A5.1-81
WELD METAL CLASSIFICATION..... E7018
FLUX..... D.N.A.
SINGLE OR MULTIPLE ARC..... SINGLE
POLARITY..... DC+ OR AC
ELECTRICAL STICK OUT..... D.N.A.
ROOT TREATMENT..... MANUAL CLEANING
PREHEAT AND INTERPASS TEMPERATURE.... SEE ATTACHED PREHEAT CHART
OPEN CIRCUIT VOLTAGE..... 60

WELDING PROCEDURE

PASS NO.	WIRE SIZE	WELDING CURRENT AMPS	WELDING CURRENT VOLTS	TRAVEL IPM	JOINT DETAIL
1	1/8	160	*	6-9	TACK, REPAIRS, LESS THAN 6"
1	5/32	215	*	8-13	FILLET WELDS
1	3/16	230	*	9-15	" "
1	7/32	275	*	9-16	" "
1	1/4	350	*	11-17	" "

* WELD SIZE DETERMINED BY TRAVEL SPEED
*VOLTAGE FIXED

THIS PROCEDURE MAY VARY DUE TO FABRICATION SEQUENCE, FIT-UP, PASS SIZE, ETC. WITHIN THE "LIMITATION OF VARIABLES" GIVEN IN THE AMERICAN WELDING SOCIETY CODE, A.W.S. D1.1.

WELDING PROCEDURE FOR AWS PREQUALIFIED JOINTS

W2ME

PROCEDURE SPECIFICATIONS

MATERIAL SPECIFICATION..... ASTM, A-36, A-572, A-441, A-588
WELDING PROCESS..... SHIELDED METAL ARC
MANUAL OR MACHINE..... MANUAL
POSITION OF WELDING..... 4F (OVERHEAD)
FILLER METAL SPECIFICATION..... AWS A5.1-81
FILLER METAL CLASSIFICATION..... E7018
FLUX..... D.N.A.
SINGLE OR MULTIPLE ARC..... SINGLE
POLARITY..... DC+ OR AC
ELECTRICAL STICK OUT..... D.N.A.
ROOT TREATMENT..... MANUAL CLEANING
PREHEAT AND INTERPASS TEMPERATURE.... SEE ATTACHED PREHEAT CHART
OPEN CIRCUIT VOLTAGE..... 60

WELDING PROCEDURE

PASS NO.	WIRE SIZE	WELDING CURRENT AMPS	WELDING CURRENT VOLTS	TRAVEL IPM	JOINT DETAIL
1	1/8	140	*	6-9	TACK WELDS
1	5/32	200	*	8-11	TACK WELDS

*VOLTAGE FIXED

THIS PROCEDURE MAY VARY DUE TO FABRICATION SEQUENCE, FIT-UP, PASS SIZE, ETC. WITHIN THE "LIMITATION OF VARIABLES" GIVEN IN THE AMERICAN WELDING SOCIETY CODE, A.W.S. D1.1.

WELDING PROCEDURE FOR AWS PREQUALIFIED JOINTS

W2XME

PROCEDURE SPECIFICATIONS

MATERIAL SPECIFICATION..... ASTM, A-36, A-572, A-588
WELDING PROCESS..... SHIELDED METAL ARC
MANUAL OR MACHINE..... MANUAL
POSITION OF WELDING..... 1F,2F (FLAT AND HORIZONTAL)
FILLER METAL SPECIFICATION..... AWS A5.5-81
FILLER METAL CLASSIFICATION..... E8018-C3
FLUX..... D.N.A.
SINGLE OR MULTIPLE ARC..... SINGLE
POLARITY..... DC+ OR AC
ELECTRICAL STICK OUT..... D.N.A.
ROOT TREATMENT..... MANUAL CLEANING
PREHEAT AND INTERPASS TEMPERATURE.... SEE ATTACHED PREHEAT CHART
OPEN CIRCUIT VOLTAGE..... 60

WELDING PROCEDURE

PASS NO.	WIRE SIZE	WELDING CURRENT AMPS	WELDING CURRENT VOLTS	TRAVEL IPM	JOINT DETAIL
1-3	1/8	140	*	6-9	REPAIRS LESS THAN 6"
1-3	5/32	200	*	8-11	" " " " "

*VOLTAGE FIXED

THIS PROCEDURE MAY VARY DUE TO FABRICATION SEQUENCE, FIT-UP, PASS SIZE, ETC. WITHIN THE "LIMITATION OF VARIABLES" GIVEN IN THE AMERICAN WELDING SOCIETY CODE, A.W.S. D1.1.

WELDING PROCEDURE FOR AWS PREQUALIFIED JOINTS

W11XME

PROCEDURE SPECIFICATIONS

MATERIAL SPECIFICATION..... ASTM, A-36, A-572, A-441, A-588
WELDING PROCESS..... SUBMERGED ARC
MANUAL OR MACHINE..... MACHINE
POSITION OF WELDING..... 2F (HORIZONTAL)
FILLER METAL SPECIFICATION..... AWS A5.17-80
FILLER METAL CLASSIFICATION..... F7A2-EH12K
FLUX..... LINCOLN 761 OR 860
SINGLE OR MULTIPLE ARC..... SINGLE ELECTRODE L 61
POLARITY..... DC-
ELECTRICAL STICK OUT..... STANDARD 1"
ROOT TREATMENT..... MANUAL CLEANING
PREHEAT AND INTERPASS TEMPERATURE.... SEE ATTACHED PREHEAT CHART
OPEN CIRCUIT VOLTAGE..... 60

WELDING PROCEDURE

PASS NO.	WIRE SIZE	WELDING CURRENT AMPS	WELDING CURRENT VOLTS	TRAVEL IPM	JOINT DETAIL
1	5/32	450	37	27	3/8"x1 1/4" FILLET
1	5/32	450	37	17	5/16" FILLET

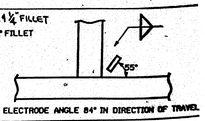

TOLERANCES:
AMPS: 485-495
VOLTS: 34.5-35.5
TRAVEL SPEED: 27: 23-31
17: 14.5-19.5

* ELECTRODE ANGLE 84° IN DIRECTION OF TRAVEL

PASS NO.	POLARITY DC	WELDING AMPS	WELDING VOLTS	TRAVEL (IPM)
1	SEE ABOVE			
2	REVERSE	420	32	18
1	SEE ABOVE			
2	STRAIGHT	450	36	16
3	REVERSE	420	32	18

JOINT DETAIL AND PASS SEQUENCE

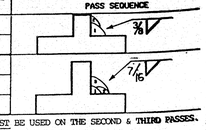

NOTE: THE FOLLOWING WIRE AND FLUX MUST BE USED ON THE SECOND & THIRD PASSES.
FILLER METAL SPECIFICATION..... AWS A5.23-80
FILLER METAL CLASSIFICATION..... F7A4-EH12K-NIL
FLUX/WIRE..... LINCOLN AXXXX18/L61 (5/32 DIA.)

TOLERANCES	AMPS	VOLTS	TRAVEL SPEED
	420: 378-462	32: 30-34	16: 13.5-18.5
	450: 485-495	36: 33.5-38.5	18: 15-21
	470: 423-517	37: 34.5-39.5	

THIS PROCEDURE MAY VARY DUE TO FABRICATION SEQUENCE, FIT-UP, PASS SIZE, ETC. WITHIN THE "LIMITATION OF VARIABLES" GIVEN IN THE AMERICAN WELDING SOCIETY CODE, A.W.S. D1.1.

WELDING PROCEDURE FOR AWS PREQUALIFIED JOINTS

W12XME

PROCEDURE SPECIFICATIONS

MATERIAL SPECIFICATION..... ASTM, A-36, A-572, A-441, A-588
WELDING PROCESS..... SUBMERGED ARC
MANUAL OR MACHINE..... MACHINE (DART)
POSITION OF WELDING..... 2F (HORIZONTAL)
FILLER METAL SPECIFICATION..... AWS A5.17-80
FILLER METAL CLASSIFICATION..... F7A2-EH12K
FLUX..... LINCOLN 761
SINGLE OR MULTIPLE ARC..... SINGLE ELECTRODE L 61
POLARITY..... DC-
ELECTRICAL STICK OUT..... STANDARD 1"
ROOT TREATMENT..... MANUAL CLEANING
PREHEAT AND INTERPASS TEMPERATURE.... SEE ATTACHED PREHEAT CHART
OPEN CIRCUIT VOLTAGE..... 60

WELDING PROCEDURE

PASS NO.	WIRE SIZE	WELDING CURRENT AMPS	WELDING CURRENT VOLTS	TRAVEL IPM	JOINT DETAIL
1	5/32	400	32	23	1/2" FILLET
1	5/32	400	32	15	5/16" FILLET

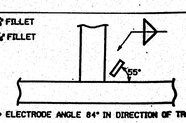

TOLERANCES:
AMPS: 368-440
VOLTS: 29.8-34.2
TRAVEL SPEED: 23: 19.5-26.5
15: 12.5-17.5

* ELECTRODE ANGLE 84° IN DIRECTION OF TRAVEL

PASS NO.	POLARITY DC	WELDING AMPS	WELDING VOLTS	TRAVEL (IPM)
1	SEE ABOVE			
2	REVERSE	420	32	18
1	SEE ABOVE			
2	STRAIGHT	450	36	16
3	REVERSE	420	32	18

JOINT DETAIL AND PASS SEQUENCE

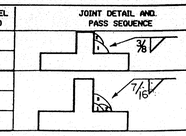

NOTE: THE FOLLOWING WIRE AND FLUX MUST BE USED ON THE SECOND & THIRD PASSES.
FILLER METAL SPECIFICATION..... AWS A5.23-80
FILLER METAL CLASSIFICATION..... F7A4-EH12K-NIL
FLUX/WIRE..... LINCOLN AXXXX18/L61 (5/32 DIA.)

TOLERANCES	AMPS	VOLTS	TRAVEL SPEED
	420: 378-462	32: 30-34	16: 13.5-18.5
	450: 485-495	36: 33.5-38.5	18: 15-21
	470: 423-517	37: 34.5-39.5	

THIS PROCEDURE MAY VARY DUE TO FABRICATION SEQUENCE, FIT-UP, PASS SIZE, ETC. WITHIN THE "LIMITATION OF VARIABLES" GIVEN IN THE AMERICAN WELDING SOCIETY CODE, A.W.S. D1.1.

WELDING PROCEDURE FOR AWS PREQUALIFIED JOINTS

W13XME

PROCEDURE SPECIFICATIONS

MATERIAL SPECIFICATION..... ASTM, A-36, A-572, A-441, A-588
WELDING PROCESS..... SUBMERGED ARC
MANUAL OR MACHINE..... MACHINE (SQUIRT)
POSITION OF WELDING..... 2F (HORIZONTAL)
FILLER METAL SPECIFICATION..... AWS A5.17-80
FILLER METAL CLASSIFICATION..... F7A2-EH12K
FLUX..... LINCOLN 761
SINGLE OR MULTIPLE ARC..... SINGLE ELECTRODE L 61
POLARITY..... DC+
ELECTRICAL STICK OUT..... STANDARD 1"
ROOT TREATMENT..... MANUAL CLEANING
PREHEAT AND INTERPASS TEMPERATURE.... SEE ATTACHED PREHEAT CHART
OPEN CIRCUIT VOLTAGE..... 60

WELDING PROCEDURE

PASS NO.	WIRE SIZE	WELDING CURRENT AMPS	WELDING CURRENT VOLTS	TRAVEL IPM	JOINT DETAIL
1	5/32	400	32	17	3/8" FILLET
1	5/32	400	32	11	3/8" FILLET

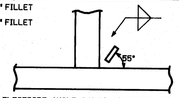

TOLERANCES:
AMPS: 368-440
VOLTS: 29.8-34.2
TRAVEL SPEED: 17: 14.5-19.5
11: 9.5-12.5

* ELECTRODE ANGLE 84° IN DIRECTION OF TRAVEL

THIS PROCEDURE MAY VARY DUE TO FABRICATION SEQUENCE, FIT-UP, PASS SIZE, ETC. WITHIN THE "LIMITATION OF VARIABLES" GIVEN IN THE AMERICAN WELDING SOCIETY CODE, A.W.S. D1.1.

SHIELDED METAL-ARC WELDING
WITH LOW HYDROGEN ELECTRODES OR
SUBMERGED ARC WELDING

MINIMUM PREHEAT AND INTERPASS TEMPERATURE

THICKNESS OF THICKEST PART AT POINT OF WELDING	M183 (ASTM A36) M223 (A572,GR.50)	M222 (A588)
INCHES	DEGREES (F)	DEGREES (F)
TO 3/4	50	100
OVER 3/4 TO 1 1/2	70	200
OVER 1 1/2 TO 2 1/2	150	300
OVER 2 1/2	225	350

NOTE: FOR DIAPHRAGM CONNECTION PLATES, INTERMEDIATE STIFFENERS AND BEARING STIFFENERS: DO NOT WRAP FILLET WELDS AROUND ENDS OF THE PLATES (FOR WEB AND FLANGE).

R95-115

NO.	REVISION	DATE
2	CHANGE W11X, W12X	2-21-85
1	REVISION CHANGE DET. W11 & W12	1-4-85

HIGH STEEL STRUCTURES, INC.
1905 Old Philadelphia Pike
Lancaster, Pennsylvania 17603
Phone 717/299-523
A Subsidiary of High Industries, Inc.

WELDING PROCEDURES
I-395 BRIDGE OVER PENOBSCOT RIVER
I-395 BRIDGE STA. 164+60.00
PENOBSCOT COUNTY
STATE OF MAINE
DEPARTMENT OF TRANSPORTATION

STATE CONTRACT OR REF.NO. 6 CONTRACTOR CIANBRO CORP.
IN CHARGE: T.M. MADE BY: S.J.A. CHK.D. BY: T.M. DATE: 6-26-84
CONTRACT NUMBER: ME-84088-1 DRAWING NUMBER: WP1

FED. ROAD DIV. NO.	STATE	FED. AID PROJ. NO.

WELDING PROCEDURE FOR STAINLESS STEEL ON ME-84088

WIRE

PROCEDURE SPECIFICATION

MATERIAL SPECIFICATION.....ASTM A-588, A240 Type 304
WELDING PROCESS.....Manual GTAW
POSITION OF WELDING.....2F
ELECTRODE SPECIFICATION.....AWS A5.12-69
ELECTRODE CLASSIFICATION.....EWTh-2 (2% Thoriated)
FILLER METAL.....Autogenous Weld
GAS SHIELDING.....Argon
ELECTRODE SIZE.....1/16"
NOZZLE SIZE.....#6 (3/8")
POLARITY.....DC-
ELECTRICAL STICKOUT.....3/4"
ROOT TREATMENT.....Manual Cleaning
PREHEAT AND INTERPASS TEMPERATURE.....None

WELDING PROCEDURE

PASS NO.	WELD SIZE	WELDING CURRENT AMPS	WELDING CURRENT VOLTS	TRAVEL IPM	GAS FLOW CFH	JOINT DETAIL
1	1/16	60	12	4	20	Witnessed by H. C. Wingerter J.T.L. 12/12/84

TOLERANCES:

AMPS: 54-66
VOLTS: 11.2-12.8
TRAVEL SPEED: 3-5
GAS FLOW: 18-25
Tip Angle: 17°
Tip Radius: 1/32 (.0078)

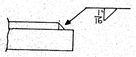

THIS PROCEDURE MAY VARY DUE TO FABRICATION SEQUENCE, FIT-UP, PASS SIZE, ETC.

WELDING PROCEDURE FOR AWS PREQUALIFIED JOINTS

W29ME

PROCEDURE SPECIFICATIONS

MATERIAL SPECIFICATION..... ASTM, A-36, A-514, A-588
WELDING PROCESS..... SUBMERGED ARC
MANUAL OR MACHINE..... MACHINE OR (SEMI-AUTOMATIC)
POSITION OF WELDING..... 1G(FLAT)
FILLER METAL SPECIFICATION..... AWS A5.17-80
FILLER METAL CLASSIFICATION..... F7A2-EM12K
FLUX..... LINCOLN 860
SINGLE OR MULTIPLE ARC..... LINCOLN L61 SINGLE ELECTRODE
POLARITY..... DC+
ELECTRICAL STICK OUT..... STANDARD 1"
ROOT TREATMENT..... MANUAL CLEANING
PREHEAT AND INTERPASS TEMPERATURE..... SEE ATTACHED PREHEAT CHART
OPEN CIRCUIT VOLTAGE..... 68

WELDING PROCEDURE

PASS NO.	WIRE SIZE	WELDING CURRENT AMPS	WELDING CURRENT VOLTS	TRAVEL IPM	JOINT DETAIL
1-3	5/32	450	37	17	

TOLERANCES:

AMPS: 405-495
VOLTS: 34.5-39.5
WIRE FEED SPEED: 82-107
TRAVEL SPEED: 14.5-19.5

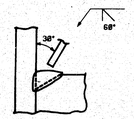

TC-P4-S

ELECTRODE ANGLE 84° IN DIRECTION OF TRAVEL

THIS PROCEDURE MAY VARY DUE TO FABRICATION SEQUENCE, FIT-UP, PASS SIZE, ETC. WITHIN THE "LIMITATION OF VARIABLES" GIVEN IN THE AMERICAN WELDING SOCIETY CODE, A.W.S. D1.1.

WELDING PROCEDURE FOR AWS PREQUALIFIED JOINTS

W31ME

PROCEDURE SPECIFICATIONS

MATERIAL SPECIFICATION..... ASTM, A-36, A-514, A-588
WELDING PROCESS..... SAW, SINGLE ELECTRODE
MANUAL OR MACHINE..... MACHINE,OR SEMIAUTOMATIC
POSITION OF WELDING..... 1G (FLAT)
FILLER METAL SPECIFICATION..... AWS A5.17-80
WELD METAL CLASSIFICATION..... F7A2-EM12K
FLUX/WIRE..... LINCOLN 860/L61
POLARITY..... DC+
ELECTRICAL STICK OUT (INCHES)..... 1
ROOT TREATMENT..... MANUAL CLEANING
PREHEAT AND INTERPASS TEMPERATURE.... SEE PREHEAT CHART
OPEN CIRCUIT VOLTAGE..... 60

WELDING PROCEDURE

PASS NO.	WIRE SIZE	WELDING CURRENT AMPS	WELDING CURRENT VOLTS	TRAVEL IPM	JOINT DETAIL
1-3	5/32	450	37	17	

TOLERANCES:

AMPS: 405-495
WIRE FEED SPEED: 82-107
VOLTS: 34.5-39.5
TRAVEL SPEED: 14.5-19.5

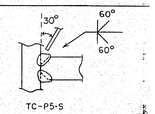

TC-P5-S

ELECTRODE ANGLE 84° IN DIRECTION OF TRAVEL

THIS PROCEDURE MAY VARY DUE TO FABRICATION SEQUENCE, FIT-UP, PASS SIZE, ETC. WITHIN THE "LIMITATION OF VARIABLES" GIVEN IN THE AMERICAN WELDING SOCIETY CODE, A.W.S. D1.1.

SHIELDED METAL-ARC WELDING
WITH LOW HYDROGEN ELECTRODES OR
SUBMERGED ARC WELDING

MINIMUM PREHEAT AND INTERPASS TEMPERATURE

THICKNESS OF THICKEST PART AT POINT OF WELDING	M183 (ASTM A36) H223 (A572,GR.50)	M222 (A588)
INCHES	DEGREES (F)	DEGREES (F)
TO, ¾	50	100
OVER ¾ TO 1½	70	200
OVER 1½ TO 2½	150	300
OVER 2½	225	350

Preheat & Interpass Temperatures for 1" Thick ASTM A514
Minimum Preheat and Interpass Temperature 125°F. Maximum Preheat and Interpass Temperature 250°F.

NO PREHEAT REQUIRED FOR A240 TYPE 304 STAINLESS STEEL.

NO.	REVISION	DATE
3	REVISED W4ME	12-13-84
2	added 10-11-84 appv'l not. deleted W35ME, added W31ME.	10-17-84
1	added 7-12-84 appv'l not. & W55ME procedure	8-17-84

HIGH STEEL STRUCTURES, INC.
1905 Old Philadelphia Pike
Lancaster, Pennsylvania 17604
Phone 717/299-5211
A Subsidiary of High Industries, Inc.

WELDING PROCEDURES FOR POT BEARINGS
I-395 BRIDGE OVER PENOBSCOT RIVER
I-395 BRIDGE STA. 164+60.00
PENOBSCOT COUNTY
STATE OF MAINE
DEPARTMENT OF TRANSPORTATION

STATE CONTRACT OR REF. NO. 6 CONTRACTOR CIANBRO CORP.

IN CHARGE: T.M. MADE BY: S.J.A. CHK'D BY: T.M. DATE: 6-22-84

CONTRACT NUMBER: ME-84088123 DRAWING NUMBER: WP2

R95-116

AF 22683A

FED. ROAD DIV. NO.	STATE	FED. AID PROJ. NO.
1	ME	I-IG-395-8(82)176

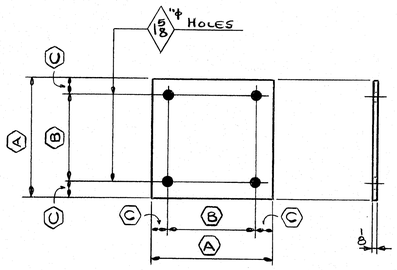

FABRIC PADS

SHIPMENT 1	2	3	MARK	REQ'D.	Ⓐ	Ⓑ	Ⓒ
10	–	–	EB1	10	1'-11½"	1'-7"	24"
10	–	–	EB2	10	2'-6¾"	2'-2¾"	24"
10	–	–	EB3	10	1'-10⅝"	1'-6⅝"	24"
–	8	–	EB1A	8	2'-4½"	1'-10¾"	3⅛"
–	8	–	EB2A	8	3'-6½"	3'-0½"	3"
–	8	–	EB3A	8	3'-2¾"	2'-8¾"	3"
–	–	16	EB1B	16	2'-9¼"	2'-4¾"	24"
–	–	8	EB2B	8	2'-7⅛"	2'-3⅜"	24"
–	–	8	EB3B	8	1'-11½"	1'-7"	24"

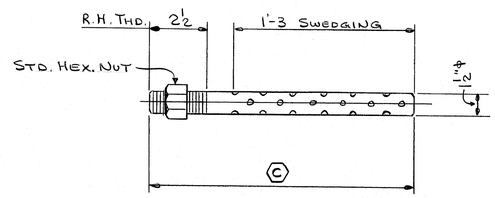

SHIPMENT 1	2	3	MARK	REQ'D	Ⓒ
80	–	32	AB1	112	1'-6¾
40	–	96	AB2	136	1'-7½
–	32	–	AB3	32	1'-7
–	32	–	AB4	32	1'-8
–	32	–	AB5	32	1'-8¼

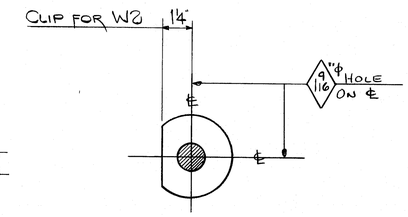

SHIPMENT 1	2	3	MARK	REQ'D.
120	64	128	W1	312
–	32	–	W2	32

BILL OF MATERIAL

SHIPMENT 1	2	3	NO.	MARK	DESCRIPTION	LENGTH		REMARKS	ITEM	WEIGHT
10	–	–	10	EB1	PAD 21⅜ x ⅛	1	9⅜	MAT'L. SPECS. AS PER MAINE DOT STAND SPEC. 713.03	SK1	
10	–	–	10	EB2	PAD 30⅛ x ⅛	2	6⅛		SK1	
10	–	–	10	EB3	PAD 20¾ x ⅛	1	8¾		SK1	
–	8	–	8	EB1A	PAD 24½ x ⅛	2	0½		SK1	
–	8	–	8	EB2A	PAD 42½ x ⅛	3	6½		SK1	
–	8	–	8	EB3A	PAD 30¾ x ⅛	3	2¾		SK1	
–	–	16	16	EB1B	PAD 33¼ x ⅛	2	9¼		SK1	
–	–	8	8	EB2B	PAD 31⅝ x ⅛	2	7⅝		SK1	
–	–	8	8	EB3B	PAD 21⅜ x ⅛	1	9⅜		SK1	
					ANCHOR BOLTS					TOTAL SHIP WEIGHT
80	–	32	112	AB1	SWEDGE BOLT 1½"ϕ	1	6¾	A36 GALV. ASTM A153 W/A563 GR.A HEX NUT	3/2 ½	1221
40	–	96	136	AB2		1	7½		37/3 1/3	1533
–	32	–	32	AB3		1	7		½	353
–	32	–	32	AB4		1	8		⅓	369
–	32	–	32	AB5	SWEDGE BOLTS 1½"ϕ	1	8¼		⅕	373
					WASHERS					
120	64	128	312	W1	3"ϕ WASHER	0	⅜	A36 GALV. ASTM A153	3/4 ¼	172
–	32	–	32	W2	3"ϕ CLIPPED WASHER	0	⅜	A36 GALV. ASTM A153	1/8	17

SHOP NOTE

HOLES: AS NOTED
BOLTS: NONE
PAINT: NONE

FOR GENERAL NOTES SEE DWG. N1.

R95-117

CODE : 4013

NO.	REVISION	DATE
1	general revision to agree with pot bearings	3-15-84

HIGH STEEL STRUCTURES, INC.
1905 Old Philadelphia Pike
Lancaster, Pennsylvania 17603
Phone 717/299-5211
A Subsidiary of High Industries, Inc.

BEARING DETAILS
I-395 BRIDGE OVER PENOBSCOT RIVER
I-395 BRIDGE STA. 164 + 60.00
PENOBSCOT COUNTY
STATE OF MAINE
DEPARTMENT OF TRANSPORTATION

STATE CONTRACT OR REF. NO.: 6 CONTRACTOR: CIANBRO CORP.
IN CHARGE: HINKLE MADE BY: G.F.Z. CHK.D. BY: CS DATE: 6-25-84
CONTRACT NUMBER: ME-84088-1,2&3 DRAWING NUMBER: 1 OF 36

3M POLYTRACE 0.05

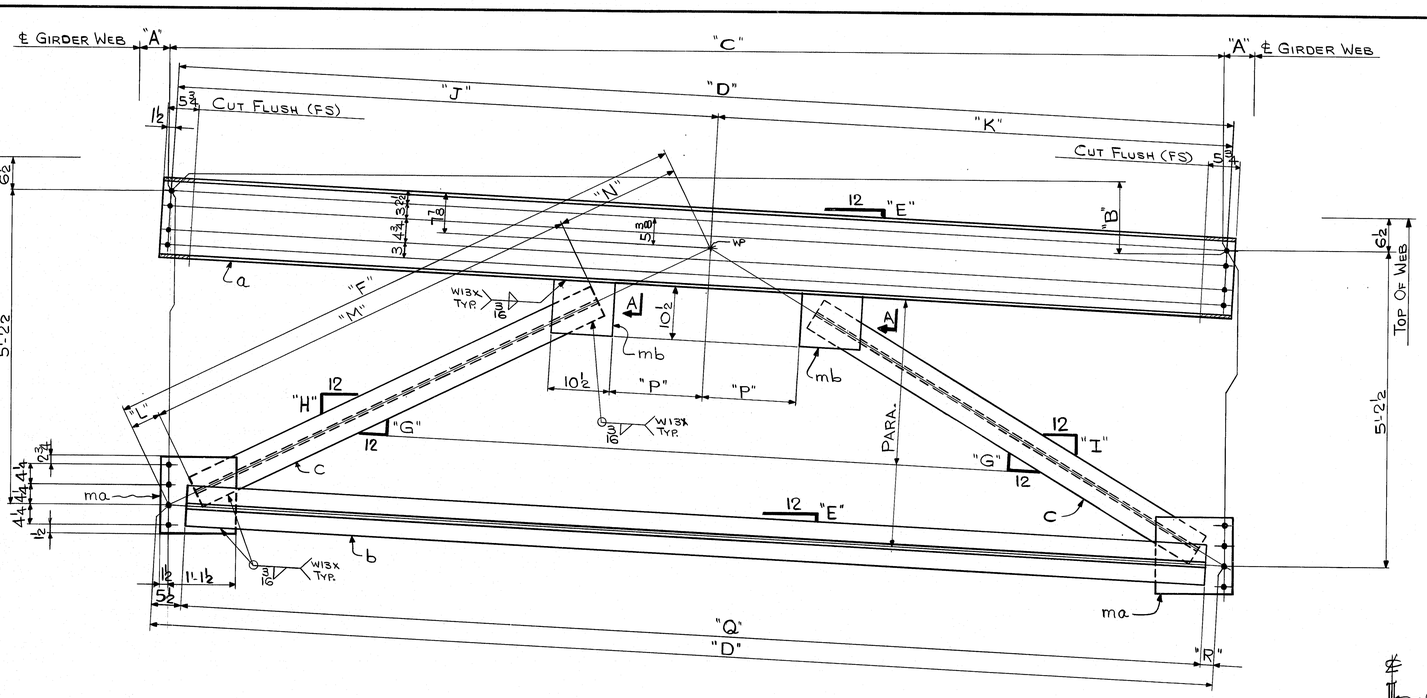

MARK	"A"	"B"	"C"	"D"	"E"	"F"	"G"	"H"	"I"	"J"	"K"	"L"	"M"	"N"	"P"	"Q"	"R"
CF1	5	8⅛	16'-11 5/16	16'-11½	½	9'-8 5/8	6¾	6⅛	7⅜	8'-8¼	8'-3¼	5⅜	7'-2¾	2'-0	1'-6¼	16'-0½	5½
CF2		9	16'-11 5/16	16'-11½	½	9'-8 11/16		6 1/16	7 7/16	8'-8½	8'-3	5 15/16				16'-0½	5½
CF3		9⅞	16'-11 5/16	16'-11 9/16	9/16	9'-8 11/16		6	7½	8'-8 13/16	8'-2¾	5 15/16				16'-0½	5 9/16
CF4		6½	16'-11½	16'-11⅝	⅜	9'-8¾		6¼	7¼	8'-7 13/16	8'-3 13/16	6				16'-0⅝	5½
CF5		9⅝	16'-11½	16'-11¾	9/16	9'-8¾	6¾	6	7½	8'-8 13/16	8'-2 15/16	6				16'-0¾	5½
CF6	5	10¾	16'-11⅝	16'-11 15/16	⅝	9'-8 13/16	6 11/16	5 15/16	7 9/16	8'-9¼	8'-2 11/16	6 1/16	7'-2¾	2'-0	1'-6¼	16'-0⅞	5 9/16
CF7	6	6½	17'-5¾	17'-5⅞	⅜	9'-11 7/16	6½	6 1/16	7	8'-10⅞	8'-7	5 1/16	7'-4¾	2'-1	1'-7½	16'-6⅞	5½
CF8		8⅜	17'-5¾	17'-5 15/16	½	9'-11½	6½	5 15/16	7 3/16	8'-11 7/16	8'-6½	5¾	7'-4¾	2'-1	1'-7½	16'-6⅞	5 9/16
CF9		10	17'-5¾	17'-6	9/16	9'-11½	6½	5 15/16	7 5/16	9'-0	8'-6	5¾	7'-4¾	2'-1	1'-7½	16'-7	5½
CF10		5¼	18'-3⅞	18'-3 15/16	5/16	10'-3 15/16	6¼	5⅞	6⅝	9'-3 7/16	9'-0½	5 1/16	7'-8¼	2'-2	1'-8½	17'-4⅞	5 9/16
CF11		11⅛	18'-3⅞	18'-4⅛	⅝	10'-4	6¼	5½	7	9'-5¼	8'-10⅞	5¾	7'-8¼	2'-2	1'-8½	17'-5⅛	5½
CF12		1'-0 5/8	18'-3⅞	18'-4¼	11/16	10'-4	6 3/16	5⅜	7⅛	9'-5 1/16	8'-10 9/16	5¾	7'-8¼	2'-2	1'-8½	17'-5¼	5½
CF13		7¾	13'-5⅛	13'-5 5/16	9/16	8'-2 13/16	8½	7⅝	9⅜	6'-11 1/16	6'-5⅝	6 13/16	6'-0	1'-8	1'-1½	12'-6¼	5 9/16
CF14	6	8½	14'-8⅜	14'-8 9/16	9/16	8'-9⅛	7¾	6 15/16	8⅝	7'-7 5/16	7'-1¼	6⅜	6'-5¼	1'-9½	1'-3¼	13'-9½	5 9/16

OPP. HD.

SECTION-A

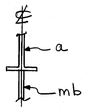

SHOP NOTE
HOLES: 15/16" ϕ
BOLTS: NONE
PAINT: NONE
FOR GENERAL NOTES SEE DWG. N1

R95-118

CODE: 5300

FED. ROAD DIV. NO.	STATE	FED. AID PROJ. NO.
1	ME	I-IG-395-8(82)176

BILL OF MATERIAL

NO.	MARK	DESCRIPTION	LENGTH		REMARKS	ITEM	SHIP WEIGHT EA.
2	CF1	CROSSFRAME					1059.
ONE	CF2						1059.
	CF3						1059.
	CF4						1059.
ONE	CF5						1060.
2	CF6						1061.
2	CF7						1089.
ONE	CF8						1089.
	CF9						1089.
	CF10						1136.
ONE	CF11						1137.
2	CF12						1137.
4	CF13				(OPP. HAND)		860.
4	CF14	CROSSFRAME			(OPP. HAND)		932.
3	a	W16x26	17	2½	CF1, CF2	3/12	
2			17	2 5/8	CF3, CF4	3/13	
1			17	2¾	CF5	3/14	
2			17	3	CF6	3/15	
2			17	8⅞	CF7	3/16	
2			17	9	CF8, CF9	3/17	
1			18	7	CF10	3/18	
1			18	7⅛	CF11	3/19	
2			18	7¼	CF12	3/10	
4			13	8⅜	CF13	3/11	
4	a	W16x26	14	11⅝	CF14	3/12	
4	b	WT7x21.5	16	0½	CF1, CF2, CF3	4/12	
1			16	0⅝	CF4	4/13	
1			16	0¾	CF5	4/14	
2			16	0⅞	CF6	4/15	
3			16	6⅜	CF7, CF8	4/21	
1			16	7	CF9	4/22	
1			17	4⅞	CF10	4/27	
1			17	5⅛	CF11	4/28	
2			17	5¼	CF12	4/29	
4			12	6¼	CF13	3/21	
4	b	WT7x21.5	13	9½	CF14	3/22	
16	c	WT6x13	7	2¾	CF1, CF2, CF3 CF4, CF5, CF6	3/13	
8			7	4¾	CF7, CF8, CF9	3/14	
8			7	8¼	CF10, CF11, CF12	3/15	
8			6	0	CF13	3/16	
8	c	WT6x13	6	5¼	CF14	3/17	
48	ma	PL 15x⅜	1	5		5/10	
48	mb	PL 10½x⅜	0	10½		5/11	

NO.	REVISION	DATE

HIGH STEEL STRUCTURES, INC.
1905 Old Philadelphia Pike
Lancaster, Pennsylvania 17603
Phone 717/299-5211
A Subsidiary of High Industries, Inc.

CROSSFRAME DETAILS
I-395 BRIDGE OVER PENOBSCOT RIVER
I-395 BRIDGE STA. 164+60.00
PENOBSCOT COUNTY
STATE OF MAINE
DEPARTMENT OF TRANSPORTATION

STATE CONTRACT OR REF. NO. 6 CONTRACTOR CIANBRO CORP.
IN CHARGE: HINKLE MADE BY: JLC CHK.D. BY: BJK DATE: 5-7-84
CONTRACT NUMBER: ME-84088-1 DRAWING NUMBER: 2 OF 36

© PHILIP POLYTRACE® 035

FED.ROAD DIV.NO.	STATE	FED.AID PROJ.NO.
1	ME.	I-IG-395-8(82)176

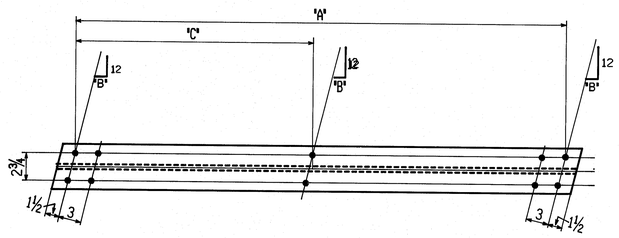

MARK	'A'	'B'	'C'
A1	18'-6 5/16	2 3/16	9'-3½
A2	18'-7 3/16	2 5/16	9'-3 5/16
A3	18'-8⅛	2 3/16	9'-4 1/16
A4	18'-1 3/16	2 5/16	9'-0 5/16
A5	18'-1 3/16	2 3/16	9'-0 5/16
A6	18'-2 5/16	2 3/16	9'-1 5/16
A7	18'-1 3/16	2 3/16	9'-0 5/16
A8	18'-1 5/16	2 7/16	9'-0 9/16
A9	18'-1 5/16	2 3/16	9'-1
A10	17'-10¾	2 7/16	8'-11 3/16
A11	17'-10 9/16	2 7/16	8'-11½
A12	17'-11 3/16	2 3/16	8'-11 5/16
A13	17'-2 5/16	2 3/16	8'-7 3/16
A14	17'-2 7/16	2 3/16	8'-7 7/16
A15	17'-2 3/16	2 5/16	8'-7¼
A16	16'-10 11/16	2 5/16	8'-5 3/16
A17	16'-10 9/16	2 5/16	8'-5 3/16
A18	16'-10 7/16	2 5/16	8'-5 7/16
A19	16'-10	2 3/16	8'-5
A20	16'-10 3/16	2 5/16	8'-5 1/16
A21	16'-10 5/16	2¾	8'-5 5/16
A22	16'-5 1/16	2 5/16	8'-2 7/16
A23	16'-5 1/16	2 5/16	8'-2½
A24	16'-5	2 5/16	8'-2½
A25	16'-4 5/16	2 5/16	8'-2½

MARK	'A'	'B'	'C'
A26	16'-3 7/16	2 5/16	8'-1 5/16
A27	16'-3 5/16	2¾	8'-1 5/16
A28	16'-3 7/16	2 5/16	8'-1 5/16
A29	16'-2 3/16	2¾	8'-1 1/16
A30	16'-2	2¾	8'-1
A31	16'-1 5/16	2¾	8'-0 7/16
A32	16'-1 3/16	2¾	8'-0 5/16
A33	15'-11½	2 5/16	7'-11 3/16
A34	15'-10 5/16	2 5/16	7'-11½
A35	15'-10 7/16	2 5/16	7'-11 7/16
A36	15'-10¾	2 5/16	7'-11 3/16
A37	15'-6¼	2 5/16	7'-9 1/16
A38	15'-6 1/16	2 5/16	7'-9 1/16
A39	15'-5 5/16	2 7/16	7'-8 5/16
A40	15'-5 1/16	2 7/16	7'-8 7/16
A41	15'-3	3	7'-7½
A42	15'-2 1/16	3	7'-7 3/16
A43	15'-2½	3	7'-7¼
A44	15'-2 3/16	3	7'-7 1/16
A45	14'-10 5/16	3 1/16	7'-5 5/16
A46	14'-10½	3 1/16	7'-5¼
A47	14'-10 5/16	3 1/16	7'-5 3/16
A48	14'-10 1/16	3 1/16	7'-5 1/16
A49	17'-0 5/16	2	8'-6 5/16
A50	17'-0 1/16	2	8'-6 3/16

OPP.HAND

MARK	'A'	'B'	'C'
A51	17'-0 7/16	2 1/16	8'-6 7/16
A52	16'-9¼	2	8'-4 5/16
A53	16'-9 7/16	2 1/16	8'-4 11/16
A54	16'-9 7/16	2 3/16	8'-4 5/16
A55	16'-0 7/16	2 1/16	8'-0 7/16
A56	16'-0 11/16	2 1/16	8'-0 7/16
A57	16'-1	2 1/16	8'-0½
A58	16'-3 1/16	2 1/16	8'-1 3/16
A59	16'-3 1/16	2 1/16	8'-1 7/16
A60	15'-6 11/16	2 1/16	7'-9 7/16
A61	15'-7 1/16	2 3/16	7'-9 9/16
A62	15'-7 7/16	2 5/16	7'-9 11/16
A63	15'-5 11/16	2¼	7'-8 11/16
A64	15'-5¾	2¼	7'-8 7/16
A65	16'-3 1/16	2 1/16	8'-1 3/16
A66	16'-3 1/16	2 1/16	8'-1 5/16
A67	15'-5 11/16	2¼	7'-8 11/16
A68	15'-5 11/16	2 3/16	7'-8 11/16

OPP.HAND

BILL OF MATERIAL

NO.	MARK	DESCRIPTION	LENGTH	REMARKS	ITEM	SHIP. WEIGHT EA.
ONE	A37	WT4 x 9	15 10 5/8		3/19	143
ONE	A38		15 10½			143
ONE	A39		15 10 3/16			143
ONE	A40		15 10 1/16			143
ONE	A41		15 7 3/8			141
ONE	A42		15 7 1/16			141
ONE	A43		15 6 7/8			140
ONE	A44		15 6 5/8			140
ONE	A45		15 3 1/16			137
ONE	A46		15 2 15/16			137
ONE	A47		15 2¾			137
ONE	A48	WT4 x 9	15 2 9/16		3/19	137
ONE	A49	WT5 x 11	17 4 5/8	OPP.HAND	5/4	191
ONE	A50		17 4¾			191
2	A51		17 4 7/8			191
2	A52		17 1¼			188
ONE	A53		17 1 7/16			189
ONE	A54		17 1 15/16			189
ONE	A55		16 4 15/16			181
ONE	A56		16 5			181
2	A57		16 5 1/16			181
ONE	A58		16 7 1/8			183
ONE	A59		16 7¼			183
2	A60		15 11			175
ONE	A61		15 11¼			176
ONE	A62		15 11 3/16			176
ONE	A63		15 9 13/16			174
ONE	A64		15 9 5/16	OPP.HAND		174
ONE	A65		16 7 1/8			183
ONE	A66		16 7¼			183
ONE	A67		15 9 5/16			174
ONE	A68	WT5 x 11	15 10 1/8		5/4	174

BILL OF MATERIAL

NO.	MARK	DESCRIPTION	LENGTH	REMARKS	ITEM	SHIP. WEIGHT EA.
2	A1	WT4 x 9	18 11		3/19	170
ONE	A2		18 11¼			171
ONE	A3		19 0 5/16			171
2	A4		18 5 5/8			166
ONE	A5		18 5 15/16			167
ONE	A6		18 6 3/16			167
ONE	A7		18 5½			166
ONE	A8		18 5¾			167
2	A9		18 6 1/8			167
ONE	A10		18 2 7/8			164
ONE	A11		18 3 1/8			165
2	A12		18 3 3/8			165
ONE	A13		17 6½			158
ONE	A14		17 6 5/8			158
2	A15		17 6¾			158
ONE	A16		17 2 5/16			155
ONE	A17		17 3			155
2	A18		17 3 1/16			155
2	A19		17 2 3/16			155
ONE	A20		17 2 7/16			155
ONE	A21		17 2 5/16			155
ONE	A22		16 9 3/16			151
ONE	A23		16 9 5/16			151
ONE	A24		16 9¼			151
ONE	A25		16 9 3/16			151
2	A26		16 7 11/16			150
ONE	A27		16 7 7/8			150
ONE	A28		16 8 3/16			150
ONE	A29		16 6 7/16			149
ONE	A30		16 6¼			149
ONE	A31		16 6 1/16			149
ONE	A32		16 5 7/8			149
ONE	A33		16 3 7/16			147
ONE	A34		16 3¼			147
ONE	A35		16 3 3/16			147
ONE	A36	WT4 x 9	16 3 1/16		3/19	147

SHOP NOTE

HOLES: 5/16" ø
BOLTS: NONE
PAINT: NONE
FOR GENERAL SHOP NOTES, SEE DWG. N1.

R95-119

CODE: 5300

NO.	REVISION	DATE

HIGH STEEL STRUCTURES, INC.
1905 Old Philadelphia Pike
Lancaster, Pennsylvania 17603
Phone 717/299-521
A Subsidiary of High Industries, Inc.

CROSSFRAMES
I-395 BRIDGE OVER PENOBSCOT RIVER
I-395 BRIDGE STA. 164+60.00
PENOBSCOT COUNTY
STATE OF MAINE
DEPARTMENT OF TRANSPORTATION

STATE CONTRACT OR REF.NO. 6 CONTRACTOR CIANBRO CORP.
IN CHARGE: HINKLE MADE BY: C.S. CHK.D. BY: G.F.Z. DATE: 7/6/84
CONTRACT NUMBER: ME-84088-1 DRAWING NUMBER: 3 OF 36

FED.ROAD DIV.NO.	STATE	FED.AID PROJ.NO.
1	ME.	I-IG-395-8(82)176

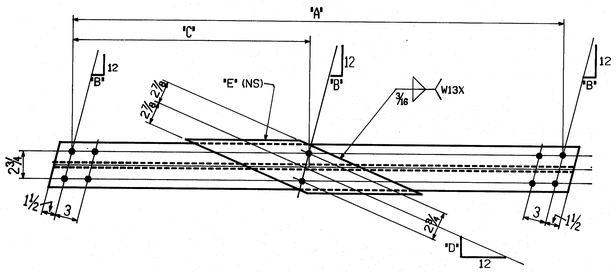

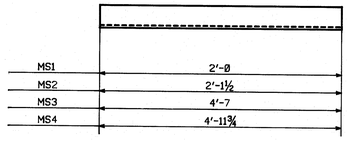

MARK	"A"	"B"	"C"	"D"	"E"
B1	18'-6 5/16	2 3/16	9'-3 1/2	4 3/16	mc
B2	18'-7 3/16	2 5/16	9'-3 5/8	4 3/4	md
B3	18'-8 1/8	2 3/8	9'-4 1/16	5 5/16	mf
B4	18'-1 7/16	2 5/16	9'-0 9/16	4 9/16	mg
B5	18'-1 9/16	2 3/8	9'-0 5/16	4 5/16	mh
B6	18'-2 5/8	2 3/8	9'-1 5/16	5 7/16	mk
B7	18'-1 3/8	2 3/8	9'-0 11/16	4 5/16	mh
B8	18'-1 5/8	2 7/16	9'-0 9/16	5 1/16	mm
B9	18'1 5/16	2 3/16	9'-1	5 5/16	mf
B10	17'-10 3/4	2 7/16	8'-11 3/8	5	mp
B11	17'-10 5/16	2 7/16	8'-11 1/2	5 1/8	mp
B12	17'-11 7/16	2 5/16	8'-11 5/8	5 5/16	mf
B13	17'-2 7/16	2 3/16	8'-7 3/16	5 5/16	mf
B14	17'-2 7/16	2 3/16	8'-7 3/16	5 3/8	ms
B15	17'-2 9/16	2 5/8	8'-7 1/4	5 7/16	mk
B16	16'-10 11/16	2 3/8	8'-5 3/8	5 7/16	mk
B17	16'-10 11/16	2 3/8	8'-5 3/8	5 1/2	mt
B18	16'-10 7/8	2 3/8	8'-5 7/16	5 3/16	mw
B19	16'-10	2 3/16	8'-5	5 3/8	ms
B20	16'-10 3/16	2 3/8	8'-5 1/8	5 1/2	mt
B21	16'-10 5/8	2 3/4	8'-5 5/16	5 5/16	my
B22	16'-5 1/8	2 11/16	8'-2 9/16	5 11/16	maa
B23	16'-5 1/16	2 11/16	8'-2 1/2	5 11/16	maa
B24	16'-5	2 11/16	8'-2 1/2	5 11/16	maa
B25	16'-4 15/16	2 11/16	8'-2 1/2	5 11/16	maa

MARK	"A"	"B"	"C"	"D"	"E"
B26	16'-3 7/16	2 11/16	8'-1 11/16	5 11/16	maa
B27	16'-3 5/8	2 3/4	8'-1 11/16	5 11/16	my
B28	16'-3 7/8	2 11/16	8'-1 11/16	6	mab
B29	16'-2 9/16	2 3/4	8'-1 1/16	5 11/16	my
B30	16'-2	2 3/4	8'-1	5 11/16	my
B31	16'-1 11/16	2 3/4	8'-0 7/8	5 11/16	my
B32	16'-1 7/16	2 3/4	8'-0 9/16	5 11/16	my
B33	15'-11 1/8	2 13/16	7'-11 3/16	5 5/16	mac
B34	15'-10 13/16	2 13/16	7'-11 1/2	5 5/16	mac
B35	15'-10 7/8	2 13/16	7'-11 7/16	5 5/16	mac
B36	15'-10 3/4	2 13/16	7'-11 3/8	5 5/16	mac
B37	15'-6 1/4	2 5/16	7'-9 1/8	6 1/4	mad
B38	15'-6 1/8	2 5/16	7'-9 1/16	6 3/16	maf
B39	15'-5 13/16	2 7/8	7'-8 15/16	6 3/16	maf
B40	15'-5 11/16	2 7/8	7'-8 7/8	6 3/16	maf
B41	15'-3	3	7'-7 1/2	6 5/16	mag
B42	15'-2 11/16	3	7'-7 3/8	6 3/8	mah
B43	15'-2 1/2	3	7'-7 1/4	6 3/8	mah
B44	15'-2 3/16	3	7'-7 1/8	6 7/16	mak
B45	14'-10 7/8	3 1/16	7'-5 15/16	6 5/8	mam
B46	14'-10 1/2	3 1/16	7'-5 1/4	6 5/8	mam
B47	14'-10 5/16	3 1/16	7'-5 3/16	6 7/16	man
B48	14'-10 1/8	3 1/16	7'-5 1/16	6 7/16	man

BILL OF MATERIAL

NO.	MARK	DESCRIPTION	LENGTH		REMARKS	ITEM	SHIP. WEIGHT EA.
ONE	B46	WT4 x 9	15	2 5/16		3/19	153
ONE	B47	WT4 x 9	15	2 3/4		3/19	153
ONE	B48	WT4 x 9	15	2 3/16		3/19	153
1	mc	BAR 5 3/4 x 7/16	2	7 1/4	B1	5/6	
1	md		2	6 1/8	B2		
4	mf		2	3 1/4	B3,B9,B12,B13		
1	mg		2	5 7/8	B4		
2	mh		2	5 1/8	B5,B7		
3	mk		2	2 3/4	B6,B15,B16		
1	mm		2	4 3/8	B8		
1	mn		2	4 7/8	B10		
1	mp		2	4 1/8	B11		
2	ms		2	3	B14,B19		
2	mt		2	2 1/4	B17,B20		
1	mw		2	2	B18		
6	my		2	1 1/8	B21,B27,B29, B30,B31,B32		
5	maa		2	1 1/2	B22,B23,B24, B25,B26		
1	mab		2	0 3/8	B28		
4	mac		2	0 5/8	B33,B34,B35,B36		
1	mad		1	11 3/8	B37		
3	maf		1	11 5/8	B38,B39,B40		
1	mag		1	11 1/8	B41		
2	mah		1	11 1/4	B42,B43		
1	mak		1	11	B44		
2	mam		1	10 1/4	B45,B46		
2	man	BAR 5 3/4 x 7/16	1	10 1/2	B47,B48	5/6	
2	MS1	L 3 x 3 x 3/8	2	0		5/14	15.
ONE	MS2	L 3 x 3 x 3/8	2	1 1/2		5/14	16.
3	MS3	L 3 x 3 x 3/8	4	7		5/14	33.
3	MS4	L 3 x 3 x 3/8	4	11 3/4		5/14	36.

BILL OF MATERIAL

NO.	MARK	DESCRIPTION	LENGTH		REMARKS	ITEM	SHIP. WEIGHT EA.
2	B1	WT4 x 9	18	11		3/19	193
ONE	B2		18	11 1/4			192
ONE	B3		19	0 5/16			191
2	B4		18	5 7/8			188
ONE	B5		18	5 5/8			188
ONE	B6		18	6 5/8			187
ONE	B7		18	5 1/2			187
ONE	B8		18	5 3/4			187
2	B9		18	6 1/8			186
ONE	B10		18	2 7/8			185
ONE	B11		18	3 1/8			185
2	B12		18	3 3/8			184
ONE	B13		17	6 1/2			178
ONE	B14		17	6 5/8			178
2	B15		17	6 3/4			177
ONE	B16		17	2 5/8			175
ONE	B17		17	3			174
2	B18		17	3 1/16			174
2	B19		17	2 3/16			174
ONE	B20		17	2 7/16			174
ONE	B21		17	2 5/8			173
ONE	B22		16	9 3/8			170
ONE	B23		16	9 5/8			170
ONE	B24		16	9 1/4			170
ONE	B25		16	9 3/16			170
2	B26		16	7 5/16			168
ONE	B27		16	7 7/8			168
ONE	B28		16	8 3/16			168
ONE	B29		16	6 7/16			167
ONE	B30		16	6 1/4			167
ONE	B31		16	6 1/16			167
ONE	B32		16	5 7/8			167
ONE	B33		16	3 7/16			164
ONE	B34		16	3 1/4			164
ONE	B35		16	3 3/16			164
ONE	B36		16	3 1/16			164
ONE	B37		15	10 5/8			160
ONE	B38		15	10 1/2			160
ONE	B39		15	10 3/16			160
ONE	B40		15	10 1/16			160
ONE	B41		15	7 3/8			157
ONE	B42		15	7 1/16			157
ONE	B43		15	6 7/8			157
ONE	B44		15	6 5/8			157
ONE	B45	WT4 x 9	15	3 1/16		3/19	153

SHOP NOTE

HOLES: 5/16" ø
BOLTS: NONE
PAINT: NONE
FOR GENERAL SHOP NOTES, SEE DWG. N1.

R95-120

CODE:5300

NO.	REVISION	DATE

HIGH STEEL STRUCTURES, INC.
1205 Old Philadelphia Pike
Lancaster, Pennsylvania 17603
Phone 717/299-5121
A Subsidiary of High Industries, Inc.

CROSSFRAMES & SCUPPER ANGLES
I-395 BRIDGE OVER PENOBSCOT RIVER
I-395 BRIDGE STA. 164+60.00
PENOBSCOT COUNTY
STATE OF MAINE
DEPARTMENT OF TRANSPORTATION

STATE CONTRACT OR REF.NO. 6 CONTRACTOR CIANBRO CORP.
IN CHARGE: HINKLE MADE BY: C.S. CHK.D. BY: G.E.Z. DATE: 7/6/84
CONTRACT NUMBER: ME-84088-1 DRAWING NUMBER: 4 OF 36

FED.ROAD DIV.NO.	STATE	FED.AID PROJ.NO.
1	ME.	I-IG-395-8(82)176

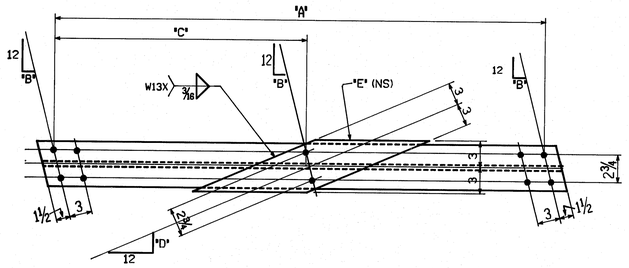

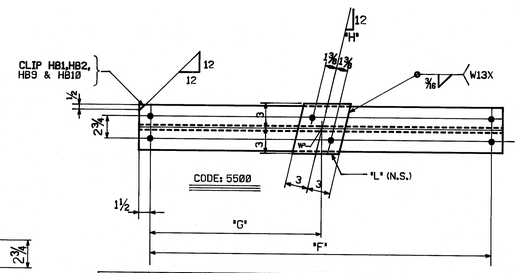

MARK	"F"	"G"	"H"	"L"
HB1	22'-0¼	10'-8⅛	¼	—
HB2	21'-3⁹⁄₁₆	10'-4	¼	mbm
HB3	20'-3	9'-11¼	2⁵⁄₁₆	—
HB4	19'-4⁹⁄₁₆	9'-4⁹⁄₁₆	2⁵⁄₁₆	mbn
HB5	19'-11¼	9'-8⁹⁄₁₆	2	—
HB6	18'-11⁹⁄₁₆	9'-1⁹⁄₁₆	2	mbp
HB9	21'-4⁹⁄₁₆	10'-4½	¼	—
HB10	21'-11¼	10'-7⅝	¼	mbm
HB11	19'-7⁵⁄₁₆	9'-7⅝	2⁵⁄₁₆	—
HB12	19'-11⅜	9'-8⅛	2⁵⁄₁₆	mbn

MARK	"F"	"G"	"H"	"L"
HB13	19'-3⁷⁄₁₆	9'-5⅛	2	—
HB14	19'-7¾	9'-6⅛	2	mbp
HB19	19'-5¾	9'-6⁵⁄₁₆	2⁵⁄₁₆	—
HB20	20'-1⅝	9'-8¾	2⁵⁄₁₆	mbs
HB21	19'-2⁹⁄₁₆	9'-4⁹⁄₁₆	2⁵⁄₁₆	—
HB22	19'-11	9'-7⅛	2⁵⁄₁₆	mbt
HB27	19'-1⁷⁄₁₆	9'-4⅛	2⁵⁄₁₆	—
HB28	20'-6	9'-10⁹⁄₁₆	2⁵⁄₁₆	mbs
HB29	18'-10¼	9'-2	2⁵⁄₁₆	—
HB30	20'-3⁵⁄₁₆	9'-9⁵⁄₁₆	2⁵⁄₁₆	mbt

MARK	"A"	"B"	"C"	"D"	"E"	
B49	17'-0⅝	2	8'-6⁵⁄₁₆	4¹⁄₁₆	map	
B50	17'-0⁹⁄₁₆	2	8'-6⅜	4⅜	mas	
B51	17'-0⅞	2¹⁄₁₆	8'-6⁷⁄₁₆	4¼	mat	
B52	16'-9¼	2	8'-4⅞	4¹⁄₁₆	map	
B53	16'-9⁷⁄₁₆	2¹⁄₁₆	8'-4⁹⁄₁₆	4⅜	mas	
B54	16'-9⅞	2⅜	8'-4⁵⁄₁₆	4⅜	maw	
B55	16'-0⅞	2¹⁄₁₆	8'-0⁷⁄₁₆	4⁵⁄₁₆	mbf	
B56	16'-0⁵⁄₁₆	2⅛	8'-0⁷⁄₁₆	4⅜	mbg	
B57	16'-1	2⅛	8'-0½	4⅜	mbg	
B58	16'-3¹⁄₁₆	2⅛	8'-1⅜	4⅜	may	
B59	16'-3¹⁄₁₆	2⅛	8'-1⅜	4⁷⁄₁₆	mba	
B60	15'-6⁵⁄₁₆	2¹⁄₁₆	7'-9⁷⁄₁₆	4⁷⁄₁₆	mbf	
B61	15'-7¹⁄₁₆	2⅜	7'-9⅜	4½	mbh	
B62	15'-7⁷⁄₁₆	2⅝	7'-9⁹⁄₁₆	4¾	mbk	
B63	15'-5⁹⁄₁₆	2¼	7'-8⁵⁄₁₆	4⅝	mbb	
B64	15'-5¾	2¼	7'-8⅞	4¾	mbc	
B65	16'-3¹⁄₁₆	2⅛	8'-1⅜	4⅜	may	OPP. HAND
B66	16'-3¹⁄₁₆	2⅛	8'-1⅜	4⁷⁄₁₆	mba	
B67	15'-5⁹⁄₁₆	2¼	7'-8⁵⁄₁₆	4⅝	mbb	
B68	15'-5⁹⁄₁₆	2⁵⁄₁₆	7'-8⁵⁄₁₆	4⅞	mbd	

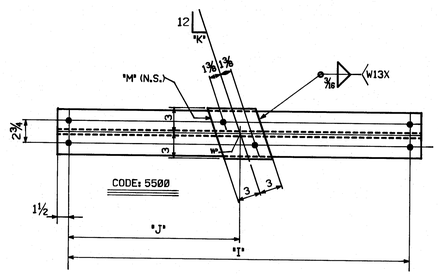

MARK	"I"	"J"	"K"	"M"
HB7	25'-0	13'-0⁹⁄₁₆	3⁹⁄₁₆	—
HB8	24'-0⅜	12'-6⁷⁄₁₆	3⁹⁄₁₆	mbw
HB15	24'-2¾	12'-7⅞	3⁹⁄₁₆	—
HB16	24'-8⁷⁄₁₆	12'-9⁹⁄₁₆	3⁹⁄₁₆	mbw
HB17	25'-5⁹⁄₁₆	12'-4⁷⁄₁₆	3⅛	—
HB18	26'-6⁵⁄₁₆	12'-10⅜	3⅛	mby

MARK	"I"	"J"	"K"	"M"
HB23	24'-10¹⁄₁₆	12'-10⅜	3½	—
HB24	25'-8⁹⁄₁₆	13'-2⅞	3½	mca
HB25	25'-0⁹⁄₁₆	12'-1¾	3⅛	—
HB26	26'-11⅞	13'-0⁹⁄₁₆	3⅛	mby
HB31	24'-4⁷⁄₁₆	12'-7½	3⁵⁄₁₆	—
HB32	26'-1⅞	13'-5⅝	3⁵⁄₁₆	mcb

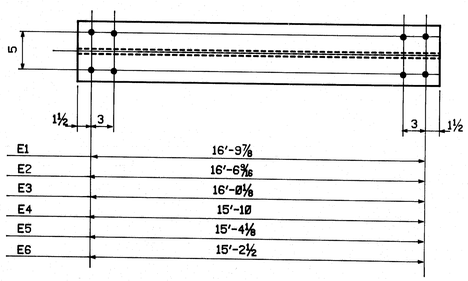

BILL OF MATERIAL

NO.	MARK	DESCRIPTION	LENGTH		REMARKS	ITEM	SHIP WEIGHT EA.
4	E1	WT7 x 21.5	17	0⅞		4/26	368
4	E2	WT7 x 21.5	16	9⁹⁄₁₆		4/25	362
4	E3	WT7 x 21.5	16	3⅛		4/18	350
4	E4	WT7 x 21.5	16	1		4/16	346
4	E5	WT7 x 21.5	15	7⅛		4/3	336
4	E6	WT7 x 21.5	15	5½		4/2	171
ONE	HB1	WT5 x 11	22	3¼		7/13	245
ONE	HB2		21	6⁹⁄₁₆		7/16	242
ONE	HB3		20	6		7/19	226
ONE	HB4		19	7⁹⁄₁₆		7/27	222
ONE	HB5		20	2¼		7/22	223
ONE	HB6		19	2⁹⁄₁₆		7/31	218
ONE	HB9		21	7⁹⁄₁₆		7/15	238
ONE	HB10		22	2¼		7/14	250
ONE	HB11		19	10⁹⁄₁₆		7/25	219
ONE	HB12		20	2⅝		7/21	229
ONE	HB13		19	6⁷⁄₁₆		7/28	215
ONE	HB14		19	10¾		7/24	225
ONE	HB19		19	8¾		7/26	218
ONE	HB20		20	4⅝		7/20	231
ONE	HB21		19	5⁹⁄₁₆		7/29	215
ONE	HB22		20	2		7/23	229
ONE	HB27		19	4⁷⁄₁₆		7/30	213
ONE	HB28		20	9		7/17	235
ONE	HB29		19	1¼		7/32	211
ONE	HB30		20	6⁵⁄₁₆		7/18	233
ONE	HB7		25	3		7/7	278
ONE	HB8		24	3⅜		7/12	275
ONE	HB15		24	5¾		7/11	270
ONE	HB16		24	11⁷⁄₁₆		7/9	282
ONE	HB17		25	8⁹⁄₁₆		7/5	284
ONE	HB18		26	9⅝		7/2	302
ONE	HB23		25	1⁷⁄₁₆		7/8	276
ONE	HB24		25	11⁹⁄₁₆		7/4	293
ONE	HB25		25	3⁹⁄₁₆		7/6	278
ONE	HB26		27	2⅞		7/1	307
ONE	HB31		24	7⁷⁄₁₆		7/10	271
ONE	HB32	WT5 x 11	26	4⅞		7/3	298
2	mbm	BAR 6 x ½	0	6⅛	HB2,HB10	5/7	
2	mbn		0	7⁹⁄₁₆	HB4,HB12		
2	mbp		0	7⁷⁄₁₆	HB6,HB14		
2	mbs		0	7⁵⁄₁₆	HB20,HB28		
2	mbt		0	7⁹⁄₁₆	HB22,HB30		
2	mbw		0	8⁹⁄₁₆	HB8,HB16		
2	mby		0	7⁵⁄₁₆	HB18,HB26		
1	mca		0	8	HB24		
1	mcb	BAR 6 x ½	0	8¹⁄₁₆	HB32	5/7	

BILL OF MATERIAL

NO.	MARK	DESCRIPTION	LENGTH		REMARKS	ITEM	SHIP WEIGHT EA.
ONE	B49	WT5 x 11	17	4⅝		5/4	223
ONE	B50		17	4¾			222
2	B51		17	4⅞			222
2	B52		17	1¼			220
ONE	B53		17	1⁷⁄₁₆			219
ONE	B54		17	1⁵⁄₁₆			217
ONE	B55		16	4⁵⁄₁₆			262
ONE	B56		16	5			261
2	B57		16	5¹⁄₁₆			261
ONE	B58		16	7⅛			212
ONE	B59		16	7¼			212
2	B60		15	11			256
ONE	B61		15	11¼			253
ONE	B62		15	11⁹⁄₁₆			249
ONE	B63		15	9⁹⁄₁₆			202
ONE	B64		15	9⁵⁄₁₆			201
ONE	B65		16	7⅛	OPP.HAND		212
ONE	B66		16	7¼	OPP.HAND		212
ONE	B67		15	9⁹⁄₁₆	OPP.HAND		202
ONE	B68	WT5 x 11	15	10⅛	OPP.HAND	5/4	201
2	map	BAR 6 x ½	3	0½	B49,B52	5/7	
2	mas		2	11½	B50,B53		
2	mat		2	11	B51		
1	maw		2	8⅝	B54		
2	may		2	10	B58,B65		
2	mba		2	9⅝	B59,B66		
2	mbb		2	8⅜	B63,B67		
1	mbc		2	7⅜	B64		
1	mbd	BAR 6 x ½	2	6⅝	B68	5/7	
3	mbf	BAR 6 x 1⅜	2	10½	B55,B60	5/8	
3	mbg	BAR 6 x 1⅜	2	10	B56,B57	5/8	
1	mbh	BAR 6 x 1⅜	2	9⅛	B61	5/8	
1	mbk	BAR 6 x 1⅜	2	7⅜	B62	5/8	

SHOP NOTE

HOLES: 5⁄₁₆" ø
BOLTS: NONE
PAINT: NONE
FOR GENERAL SHOP NOTES, SEE DWG. N1.

R95-121

CODE:5300 (UN)

NO.	REVISION	DATE

HIGH STEEL STRUCTURES, INC.
1906 Old Philadelphia Pike
Lancaster, Pennsylvania 17603
Phone 717/299-5211
A Subsidiary of High Industries, Inc.

CROSSFRAMES & HORIZ.BRACING
I-395 BRIDGE OVER PENOBSCOT RIVER
I-395 BRIDGE STA. 164+60.00
PENOBSCOT COUNTY
STATE OF MAINE
DEPARTMENT OF TRANSPORTATION

STATE CONTRACT OR REF.NO. 6 CONTRACTOR CIANBRO CORP.
IN CHARGE: HINKLE MADE BY: C.S. CHK'D. BY: G.F.Z. DATE: 7/6/87
CONTRACT NUMBER: ME-84088-1 DRAWING NUMBER: 5 OF 36

FED.ROAD DIV.NO.	STATE	FED.AID PROJ.NO.
1	ME.	I-IG-395-8(82)176

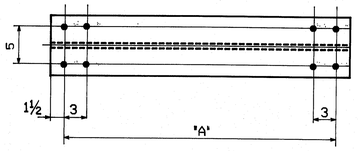

MARK	"A"
C1	18'-3¼
C2	17'-9⅝
C3	17'-9¼
C4	17'-6⅜
C5	16'-9⅞
C6	16'-6⅜
C7	16'-6⅛
C8	16'-5⅜
C9	16'-0⅜
C10	16'-0¼
C11	16'-0⅜
C12	16'-0⅛
C13	15'-10⅝
C14	15'-10
C15	15'-9¼
C16	15'-9⅛
C17	15'-8⅞
C18	15'-8⅝
C19	15'-6⅛
C20	15'-5⅝
C21	15'-5⅞
C22	15'-5¾
C23	15'-4⅛
C24	15'-2½
C25	15'-0⅞
C26	15'-0⅝
C27	15'-01/2
C28	14'-9⅝
C29	14'-9⅜
C30	14'-9⅛
C31	14'-8¾
C32	14'-5
C33	14'-4⅞
C34	14'-4¾
C35	14'-4⅜

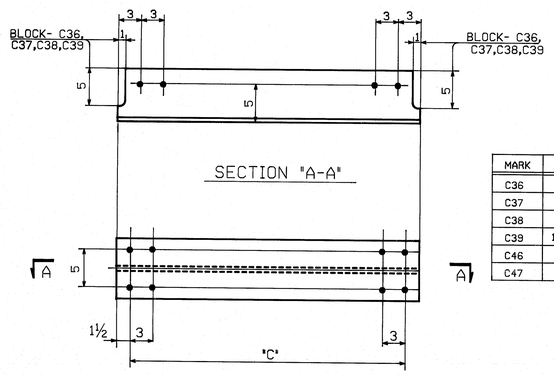

MARK	"C"
C36	16'-9⅞
C37	16'-6⅛
C38	16'-5⅜
C39	15'-10 9/16
C46	15'-10
C47	15'-4⅛

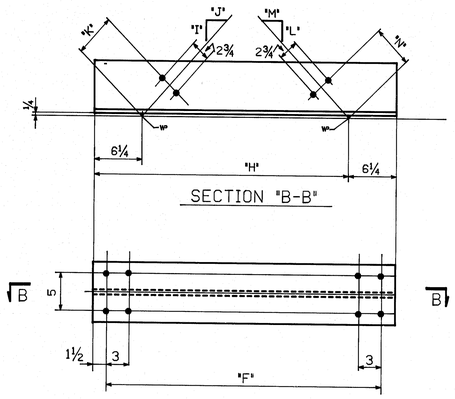

MARK	"F"	"H"	"I"	"J"	"K"	"L"	"M"	"N"
C40	16'-9⅞	16'-6⅝	12	8 9/16	5½	12	9 15/16	5 9/16
C41	16'-9⅞	16'-6⅝	12	8 7/16	5½	12	10¼	5⅞
C42	16'-6 9/16	16'-3⅝	12	11 15/16	6⅛	11 7/16	12	6⅜
C43	16'-6 9/16	16'-3⅝	11⅜	12	6⅜	12	11⅞	6⅛
C44	16'-0⅛	15'-8⅞	12	8 7/16	5½	12	9½	5¾
C45	16'-0⅛	15'-8⅞	12	8 1/16	5½	12	9 15/16	5⅞
C48	15'-2½	14'-11¼	12	8 7/16	5½	12	9⅛	5⅝
C49	15'-2½	14'-11¼	12	9¼	5⅝	12	8⅜	5½

BILL OF MATERIAL

NO.	MARK	DESCRIPTION	LENGTH		REMARKS	ITEM	WEIGHT
2	C36	WT7 x 21.5	17	0⅞		4/26	367
2	C37		16	9⅛		4/24	361
2	C38		16	8 9/16		4/23	360
2	C39		16	1 15/16		4/17	347
2	C46		16	1		4/16	346
2	C47	WT7 x 21.5	15	7⅛		4/3	336
ONE	C40	WT7 x 21.5	17	0⅞		4/26	367
ONE	C41		17	0⅞		4/26	367
ONE	C42		16	9 9/16		4/25	362
ONE	C43		16	9 9/16		4/25	362
ONE	C44		16	3⅛		4/18	350
ONE	C45		16	3⅛		4/18	350
ONE	C48		15	5½		4/2	333
ONE	C49	WT7 x 21.5	15	5½		4/2	333

BILL OF MATERIAL

NO.	MARK	DESCRIPTION	LENGTH		REMARKS	ITEM	SHP. WEIGHT EA.
4	C1	WT7 x 21.5	18	6¼		5/1	399
4	C2		18	0 9/16		4/32	389
4	C3		18	0¼		4/31	388
4	C4		17	9 9/16		4/30	383
4	C5		17	0⅞		4/26	367
2	C6		16	9 9/16		4/25	362
2	C7		16	9⅛		4/24	361
2	C8		16	8 9/16		4/23	360
ONE	C9		16	3⅜		4/20	351
ONE	C10		16	3¼		4/19	350
ONE	C11		16	3 9/16		4/19	350
3	C12		16	3⅛		4/18	350
2	C13		16	1 15/16		4/17	347
2	C14		16	1		4/16	346
ONE	C15		16	0¼		4/11	345
ONE	C16		16	0 1/16		4/10	345
ONE	C17		15	11⅞		4/9	344
ONE	C18		15	11 15/16		4/8	344
ONE	C19		15	9 1/16		4/7	339
ONE	C20		15	8 15/16		4/6	339
ONE	C21		15	8⅞		4/5	339
ONE	C22		15	8¾		4/4	339
2	C23		15	7⅛		4/3	336
2	C24		15	5½		4/2	333
2	C25		15	3⅞		4/1	330
ONE	C26		15	3⅝		3/32	329
ONE	C27		15	3½		3/31	329
ONE	C28		15	0⅝		3/30	324
ONE	C29		15	0 9/16		3/29	323
ONE	C30		15	0 1/16		3/28	323
ONE	C31		14	11¾		3/27	322
ONE	C32		14	8		3/26	316
ONE	C33		14	7⅞		3/25	316
ONE	C34		14	7¾		3/24	315
ONE	C35	WT7 x 21.5	14	7 3/16		3/23	315

SHOP NOTE

HOLES: 13/16" ø
BOLTS: NONE
PAINT: NONE
FOR GENERAL SHOP NOTES, SEE DWG. N1.

R95-122

CODE: 5300

NO.	REVISION	DATE

HIGH STEEL STRUCTURES, INC.
1908 Old Philadelphia Pike
Lancaster, Pennsylvania 17603
Phone 717/299-5121
A Subsidiary of High Industries, Inc.

CROSSFRAMES
I-395 BRIDGE OVER PENOBSCOT RIVER
I-395 BRIDGE STA. 164+60.00
PENOBSCOT COUNTY
STATE OF MAINE
DEPARTMENT OF TRANSPORTATION

STATE CONTRACT OR REF.NO. 6 CONTRACTOR CIANBRO CORP.
IN CHARGE: HINKLE MADE BY: CS CHK.D. BY: G.F.Z. DATE: 7/6/84
CONTRACT NUMBER: ME-84088-1 DRAWING NUMBER: 6 OF 36

FED. ROAD DIV. NO.	STATE	FED. AID PROJ. NO.
1	ME	I-IG-395-8(82)114

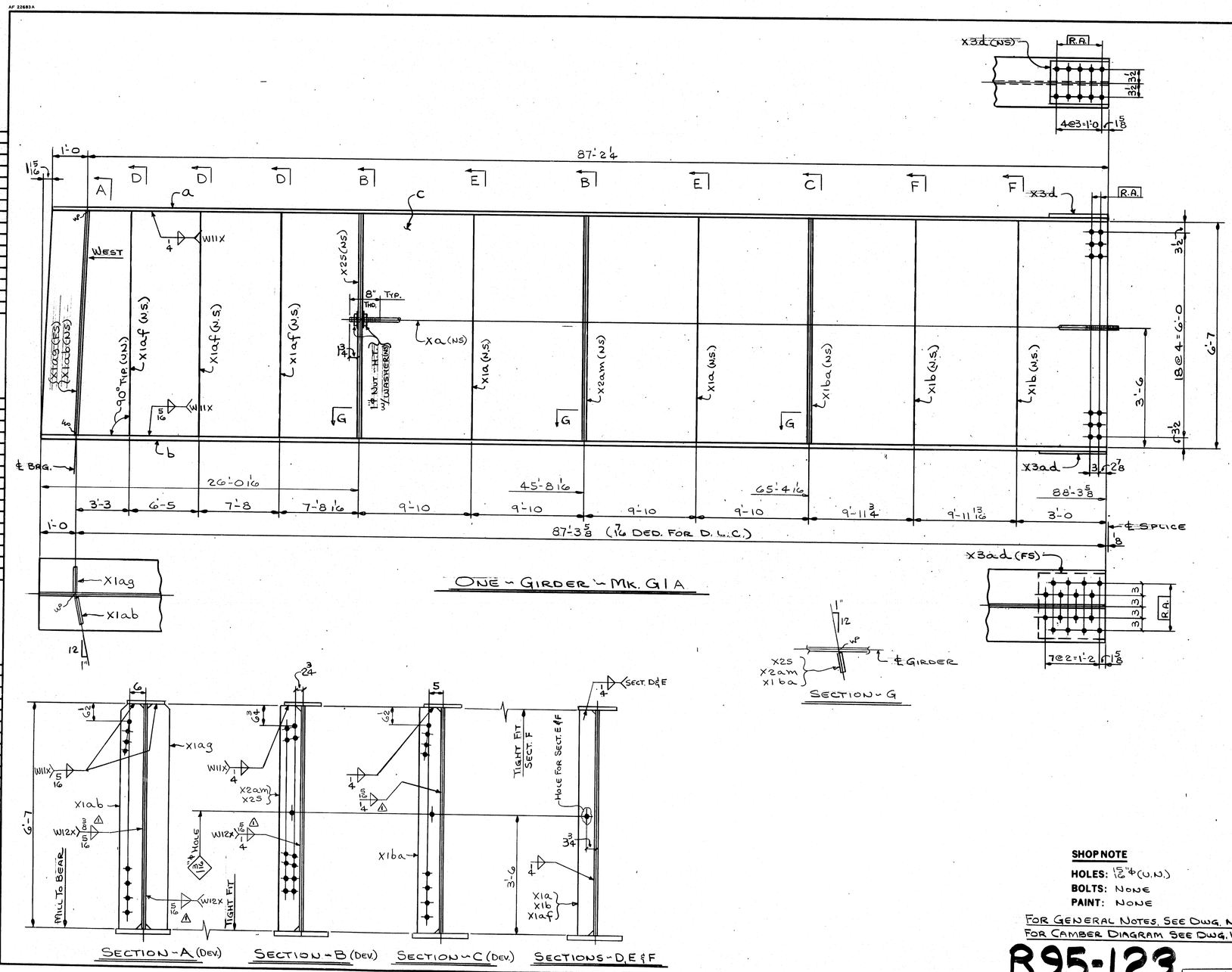

BILL OF MATERIAL

NO.	MARK	DESCRIPTION	LENGTH		REMARKS	ITEM	SHIP. WEIGHT
ONE	G1A	GIRDER					24,500
ONE	a	PL. 13 x ¾	88	2¼			
ONE	b	PL. 19 x 1½	88	3 5/16			
ONE	c	PL. 79 x ½	88	4 9/16			
ONE	X a	1⅛ ROD	62	8⅛	THD. BOTH ENDS	6/22	
ONE	X3d	FILL PL. 11 x ⅞	1	3⅛			
ONE	X3ad	FILL PL. 17 x ⅛	1	5⅛			
2	X1a	BAR 5 x 7/16	6	7			
2	X1b	BAR 5 x 7/16					
3	X1af	BAR 5 x 7/16					
ONE	X1a9	BAR 8 x 1"					
	X1ab	BAR 8 x 1"					
	X25	BAR 7 x 7/16					
	X2am	BAR 7 x 7/16					
ONE	X1ba	BAR 7 x 7/16	6	7			
2		1⅛" STD. HEX. NUTS				61/12	
2		WASH. FOR 1⅛" ROD				61/8	

SHOP NOTE

HOLES: 15/16" ϕ (U.N.)
BOLTS: NONE
PAINT: NONE

FOR GENERAL NOTES, SEE DWG. N1.
FOR CAMBER DIAGRAM SEE DWG. W01.

R95-123

CODE : 4000

NO.	REVISION	DATE
1	CHANGED WELD SIZES	1-3-85

HIGH STEEL STRUCTURES, INC.
1905 Old Philadelphia Pike
Lancaster, Pennsylvania 17603
Phone 717/299-5211
A Subsidiary of High Industries, Inc.

GIRDER G1A
I-395 BRIDGE OVER PENOBSCOT RIVER
I-395 BRIDGE STA. 164 + 60.00
PENOBSCOT COUNTY
STATE OF MAINE
DEPARTMENT OF TRANSPORTATION

STATE CONTRACT OR REF. NO. 6 CONTRACTOR CIANBRO CORP.
IN CHARGE: HINKLE MADE BY: G.F.Z. CHK.D. BY: CS DATE: 6-27-84
CONTRACT NUMBER: ME-84088-1 DRAWING NUMBER: 7 OF 36

© CADAP POLYTRACE® 0208

FED. ROAD DIV. NO.	STATE	FED. AID PROJ. NO.
1	ME	I-IG-395-8(82)104

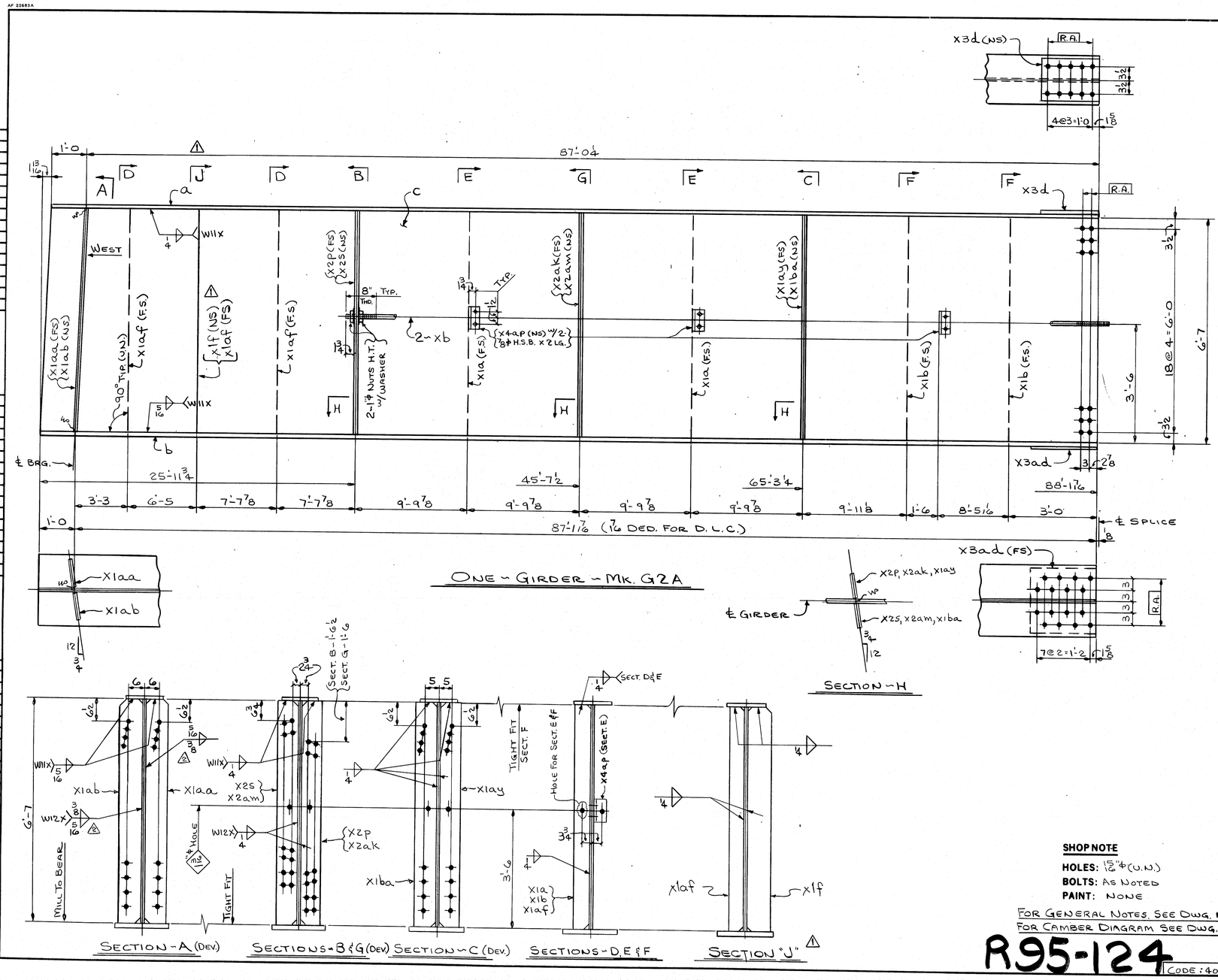

BILL OF MATERIAL

NO.	MARK	DESCRIPTION	LENGTH		REMARKS	ITEM	SHIP WEIGHT
ONE	G2A	GIRDER					24924
ONE	a	PL 13 x ¾	88	0¼			
ONE	b	PL. 19 x 1½	88	1 1/16			
ONE	c	PL. 79 x ½	88	2 1/16			
2	xb	1¼ϕ ROD	62	5/8	THD. BOTH ENDS	G/21	
ONE	x1f	PL. 10 x ⅜	6	7			
ONE	x3d	FILL PL. 11 x ⅞	1	3/8			
ONE	x3ad	FILL PL. 17 x ⅛	1	5/8			
2	x1a	BAR 5 x 7/16	6	7			
2	x1b	BAR 5 x 7/16					
3	x1af	BAR 5 x 7/16					
ONE	x1aa	BAR 8 x 1					
	x1ab	BAR 8 x 1					
	x2P	BAR 7 x 7/16					
	x2S						
	x2ak						
	x2am						
	x1ay						
ONE	x1ba	BAR 7 x 7/16	6	7			
3	X4aP	L 5 x 3 x ¼	0	6			
4		1¼ϕ STD. HEX. NUTS				B1/12	
4		WASH. FOR 1¼ϕ ROD				B1/8	
6		⅞ϕ H.S. BOLTS	0	2		B1/2	
6		WASH. FOR ⅞ϕ H.S. BOLT				B1/9	

SHOP NOTE

HOLES: 13/16ϕ (U.N.)
BOLTS: AS NOTED
PAINT: NONE

FOR GENERAL NOTES, SEE DWG. N1.
FOR CAMBER DIAGRAM SEE DWG. W1.

R95-124

CODE: 4000

NO.		REVISION	DATE
2	△	REVISION CHANGED WELD SIZES	DATE 1-3-85
1	△	REVISION contract revision control #14	DATE 9-10-84

HIGH STEEL STRUCTURES, INC.
1905 Old Philadelphia Pike
Lancaster, Pennsylvania 17603
Phone 717/299-5211
A Subsidiary of High Industries, Inc

GIRDER G2A
I395 BRIDGE OVER PENOBSCOT RIVER
I-395 BRIDGE STA. 164 + 60.00
PENOBSCOT COUNTY
STATE OF MAINE
DEPARTMENT OF TRANSPORTATION

STATE CONTRACT OR REF. NO.: 6 CONTRACTOR: CIANBRO CORP.
IN CHARGE: HINKLE MADE BY: G.F.Z. CHK.D. BY: CS DATE: 6-27-84
CONTRACT NUMBER: ME-84088-1 DRAWING NUMBER: 8 OF 36

AF 22683A
© 1984 POLYTRACE-039

FED. ROAD DIV. NO.	STATE	FED. AID PROJ. NO.
1	ME	I-IG-395-8(82)174

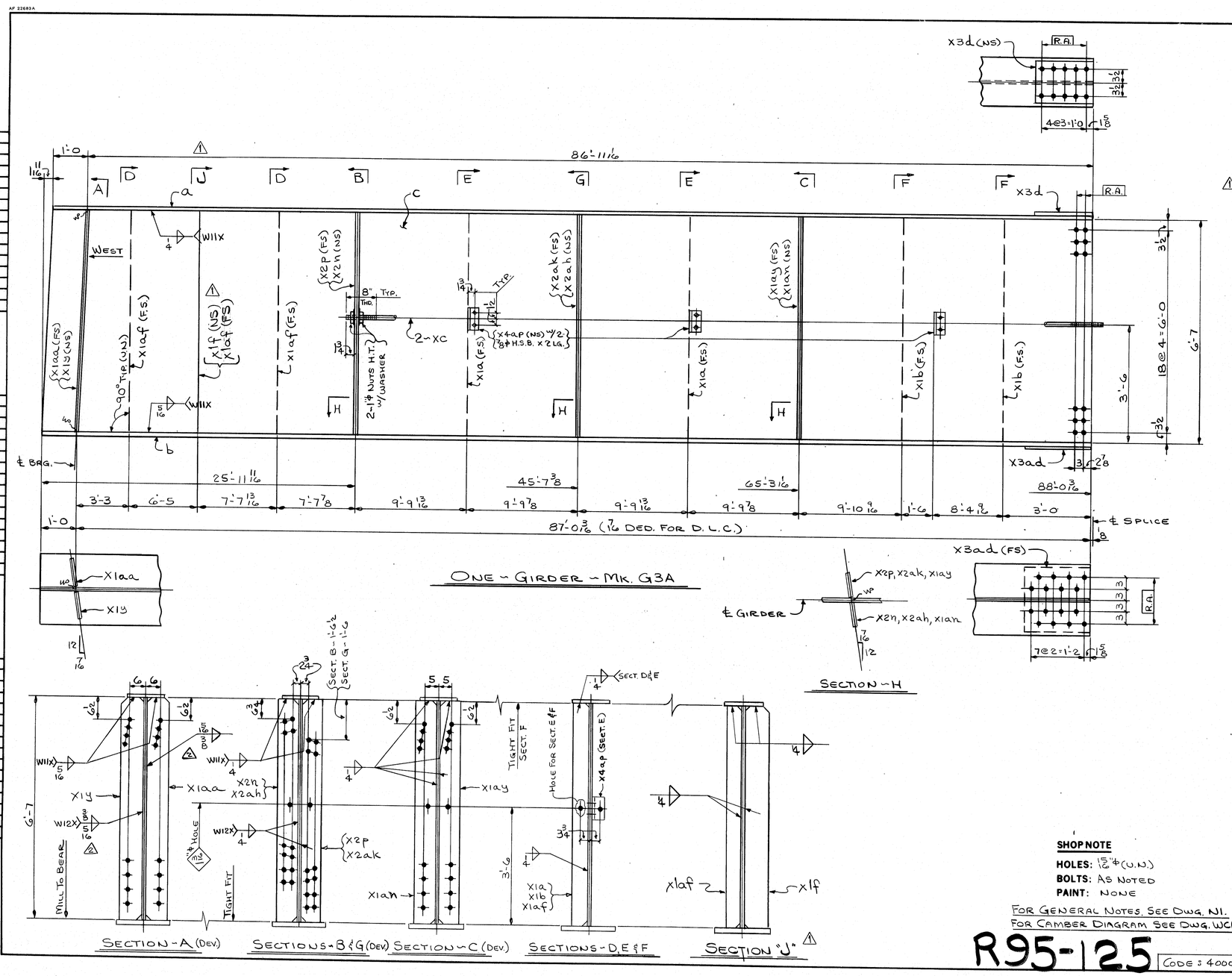

BILL OF MATERIAL

NO.	MARK	DESCRIPTION	LENGTH		REMARKS	ITEM	SHIP. WEIGHT
ONE	G3A	GIRDER					24,894
ONE	a	PL 13 x 3/4	87	11 1/16			
ONE	b	PL. 19 x 1 1/2	88	0 3/16			
ONE	c	PL. 79 x 1/2	88	0 3/4			
2	XC	1 1/4 ROD	62	5 3/8	THD. BOTH ENDS 6/20		
ONE	X1f	PL. 10 x 3/8	6	7			
ONE	X3d	FILL PL. 11 x 7/8	1	3 1/8			
ONE	X3ad	FILL PL. 17 x 1/8	1	5 1/8			
2	X1a	BAR 5 x 7/16	6	7			
2	X1b	BAR 5 x 7/16					
3	X1af	BAR 5 x 7/16					
ONE	X1aa	BAR 8 x 1					
	X1y	BAR 8 x 1					
	X2P	BAR 7 x 7/16					
	X2n						
	X2ak						
	X2ah						
	X1ay						
ONE	X1an	BAR 7 x 7/16	6	7			
3	X4aP	L 5 x 3 x 1/4	0	6			
4		1 1/4" STD. HEX. NUTS				61/12	
4		WASH. FOR 1 1/4" ROD				61/8	
6		7/8" H.S. BOLTS	0	2		61/2	
6		WASH. FOR 7/8" H.S. BOLT				61/9	

NO.	REVISION	DATE
2	CHANGED WELD SIZES	1-3-85
1	contract revision control # 14	9-10-84

HIGH STEEL STRUCTURES, INC.
1905 Old Philadelphia Pike
Lancaster, Pennsylvania 17603
Phone 717/299-5211
A Subsidiary of High Industries, Inc

GIRDER G3A
I395 BRIDGE OVER PENOBSCOT RIVER
I-395 BRIDGE STA. 164+60.00
PENOBSCOT COUNTY
STATE OF MAINE
DEPARTMENT OF TRANSPORTATION

STATE CONTRACT OR REF. NO. 6 CONTRACTOR CIANBRO CORP.
IN CHARGE: HINKLE MADE BY: G.F.Z. CHK.D BY: CS DATE 6-27-84
CONTRACT NUMBER: ME-84088-1 DRAWING NUMBER: 9 OF 36

SHOP NOTE
HOLES: 15/16"ϕ (U.N.)
BOLTS: AS NOTED
PAINT: NONE

FOR GENERAL NOTES, SEE DWG. N1.
FOR CAMBER DIAGRAM SEE DWG. W1.

R95-125

CODE : 4000

AF 22693A

© 1984 POLYTRACE 0359

FED. ROAD DIV. NO.	STATE	FED. AID PROJ. NO.
1	ME	I-IG-395-8(82)176

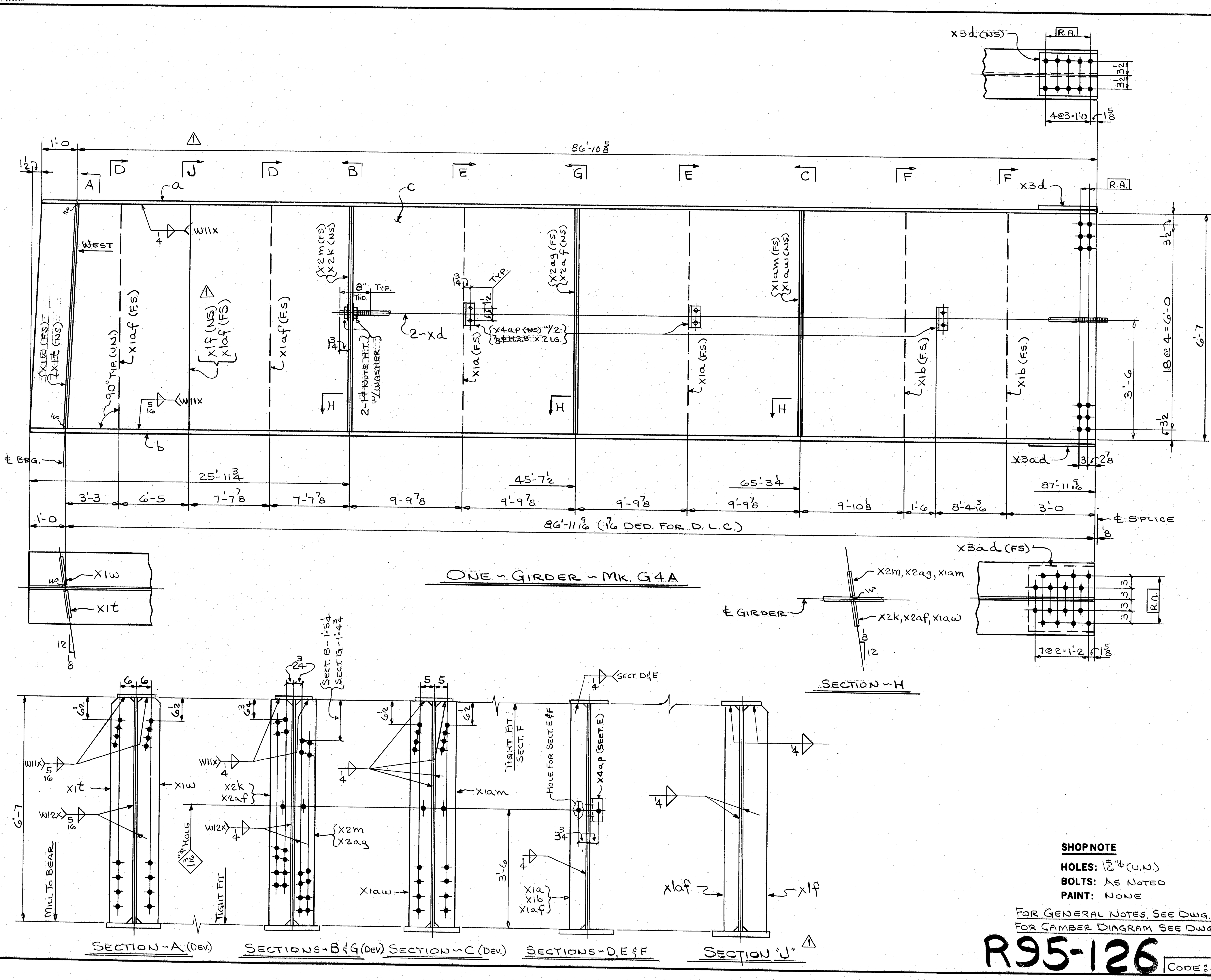

BILL OF MATERIAL

NO.	MARK	DESCRIPTION	LENGTH		REMARKS	ITEM	SHIP. WEIGHT
ONE	G4A	GIRDER					24,884
ONE	a	PL 13 x 3/4	87	10 5/8			
ONE	b	PL 19 x 1 1/2	87	11 9/16			
ONE	c	PL 79 x 1/2	88	0 1/8			
2	xd	1"φ ROD	62	4 5/8	THD. BOTH ENDS	6/19	
ONE	x1f	PL 10 x 3/8	6	7			
ONE	X3d	FILL PL 11 x 7/8	1	3 1/8			
ONE	X3ad	FILL PL 17 x 1/8	1	5 1/8			
2	X1a	BAR 5 x 7/16	6	7			
2	X1b	BAR 5 x 7/16					
3	X1af	BAR 5 x 7/16					
ONE	X1w	BAR 8 x 1					
	X1t	BAR 8 x 1					
	X2m	BAR 7 x 7/16					
	X2k						
	X2ag						
	X2af						
	X1am						
ONE	X1aw	BAR 7 x 7/16	6	7			
3	X4ap	L 5 x 3 x 1/4	0	6			
4		1"φ STD. HEX. NUTS				B1/12	
4		WASH. FOR 1"φ ROD				B1/8	
6		7/8"φ H.S. BOLTS	0	2		B1/2	
6		WASH. FOR 7/8"φ H.S. BOLT				B1/9	

SHOP NOTE

HOLES: 15/16"φ (U.N.)
BOLTS: AS NOTED
PAINT: NONE

FOR GENERAL NOTES, SEE DWG. N1.
FOR CAMBER DIAGRAM SEE DWG. WC1.

R95-126

CODE: 4000

NO.	REVISION	DATE
1	contract revision control # 14	9-10-84

HIGH STEEL STRUCTURES, INC.
1905 Old Philadelphia Pike
Lancaster, Pennsylvania 17603
Phone 717/299-5211
A Subsidiary of High Industries, Inc.

GIRDER G4A
I-395 BRIDGE OVER PENOBSCOT RIVER
I-395 BRIDGE STA. 164 + 60.00
PENOBSCOT COUNTY
STATE OF MAINE
DEPARTMENT OF TRANSPORTATION

STATE CONTRACT OR REF. NO. 6 CONTRACTOR CIANBRO CORP.
IN CHARGE: HINKLE MADE BY: G.F.Z. CHK.D. BY: CS DATE: 6-27-84
CONTRACT NUMBER: ME-84088-1 DRAWING NUMBER: 10 OF 36

FED. ROAD DIV. NO.	STATE	FED. AID PROJ. NO.
1	ME	I-IG-395-8(82)104

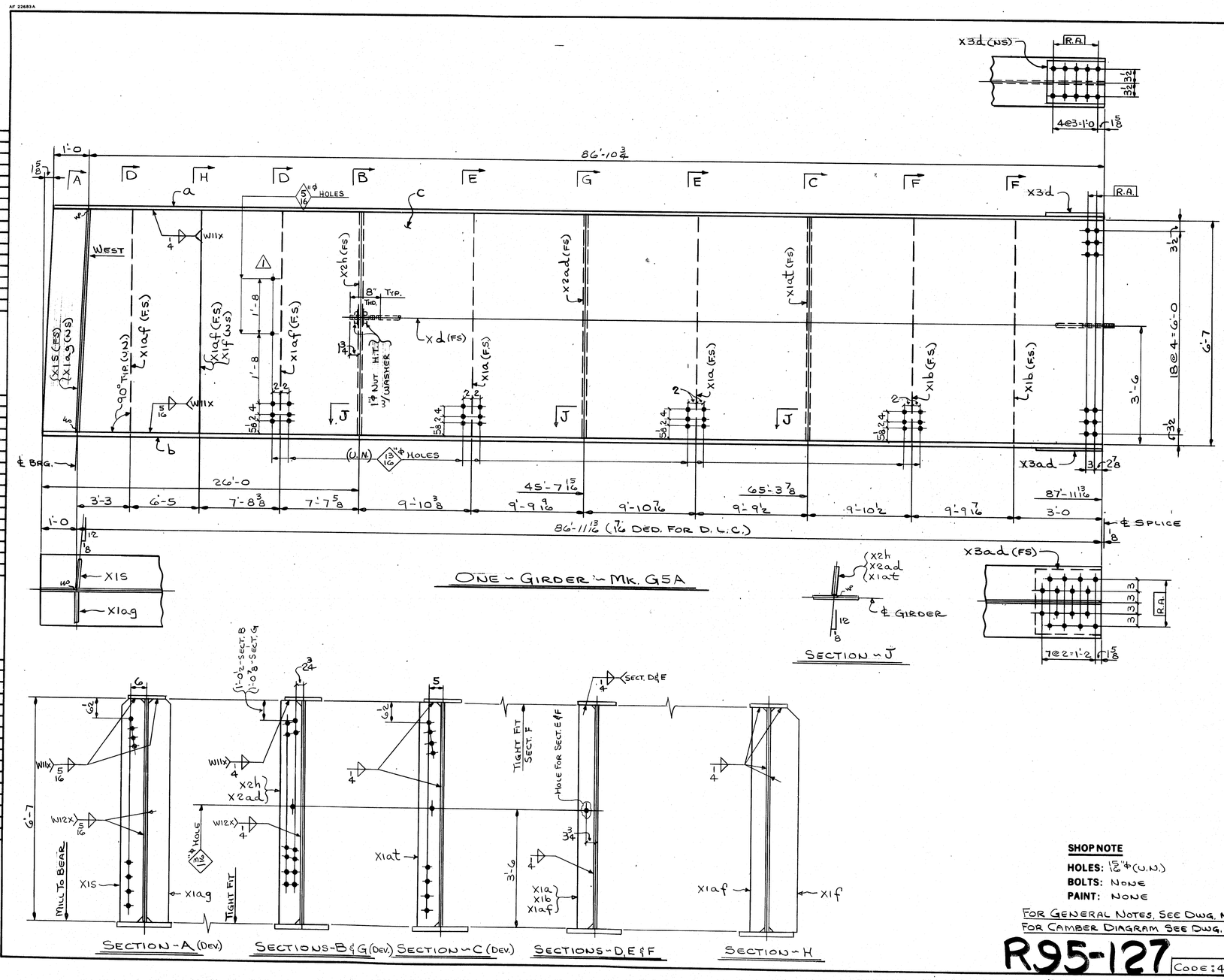

BILL OF MATERIAL

NO.	MARK	DESCRIPTION	LENGTH		REMARKS	ITEM	SHIP. WEIGHT
ONE	G5A	GIRDER					24,500
ONE	a	PL 13 x 3/4	87	10 3/4			
ONE	b	PL 19 x 1 1/2	87	11 13/16			
ONE	c	PL 79 x 1/2	88	0 3/8			
ONE	x d	1 1/4" ROD	62	4 5/8	THD. BOTH ENDS 6/19		
ONE	x3d	FILL PL 11 x 7/8	1	3 1/8			
ONE	x3ad	FILL PL 17 x 1/8	1	5 1/8			
2	x1a	BAR 5 x 7/16	6	7			
2	x1b	BAR 5 x 7/16	↑	↑			
3	x1af	BAR 5 x 7/16					
ONE	x1s	BAR 8 x 1					
	x1ag	BAR 8 x 1					
	x1f	PL 10 x 3/8					
	x2h	BAR 7 x 7/16					
↓	x2ad	BAR 7 x 7/16	↓	↓			
ONE	x1at	BAR 7 x 7/16	6	7			
2	1 1/4" STD. HEX. NUTS					61/12	
2	WASH. FOR 1 1/4" ROD					61/8	

SHOP NOTE

HOLES: 15/16"ϕ (U.N.)
BOLTS: NONE
PAINT: NONE

FOR GENERAL NOTES, SEE DWG. N1.
FOR CAMBER DIAGRAM SEE DWG. W1.

R95-127

CODE: 4000

NO.	REVISION	DATE
△	ADD. HOLES FOR CATWALK CHAIN	2-12-85

HIGH STEEL STRUCTURES, INC.
1905 Old Philadelphia Pike
Lancaster, Pennsylvania 17603
Phone 717/299-5211
A Subsidiary of High Industries, Inc.

GIRDER G5A
I395 BRIDGE OVER PENOBSCOT RIVER
I-395 BRIDGE STA. 164 + 60.00
PENOBSCOT COUNTY
STATE OF MAINE
DEPARTMENT OF TRANSPORTATION

STATE CONTRACT OR REF. NO. 6 CONTRACTOR CIANBRO CORP.
IN CHARGE: HINKLE MADE BY: G.F.Z. CHK.D BY: CS DATE: 6/27/84
CONTRACT NUMBER: ME-84088-1 DRAWING NUMBER: 11 OF 36

AF 22683A

FED. ROAD DIV. NO.	STATE	FED. AID PROJ. NO.
1	ME	I-IG-395-8(82)174

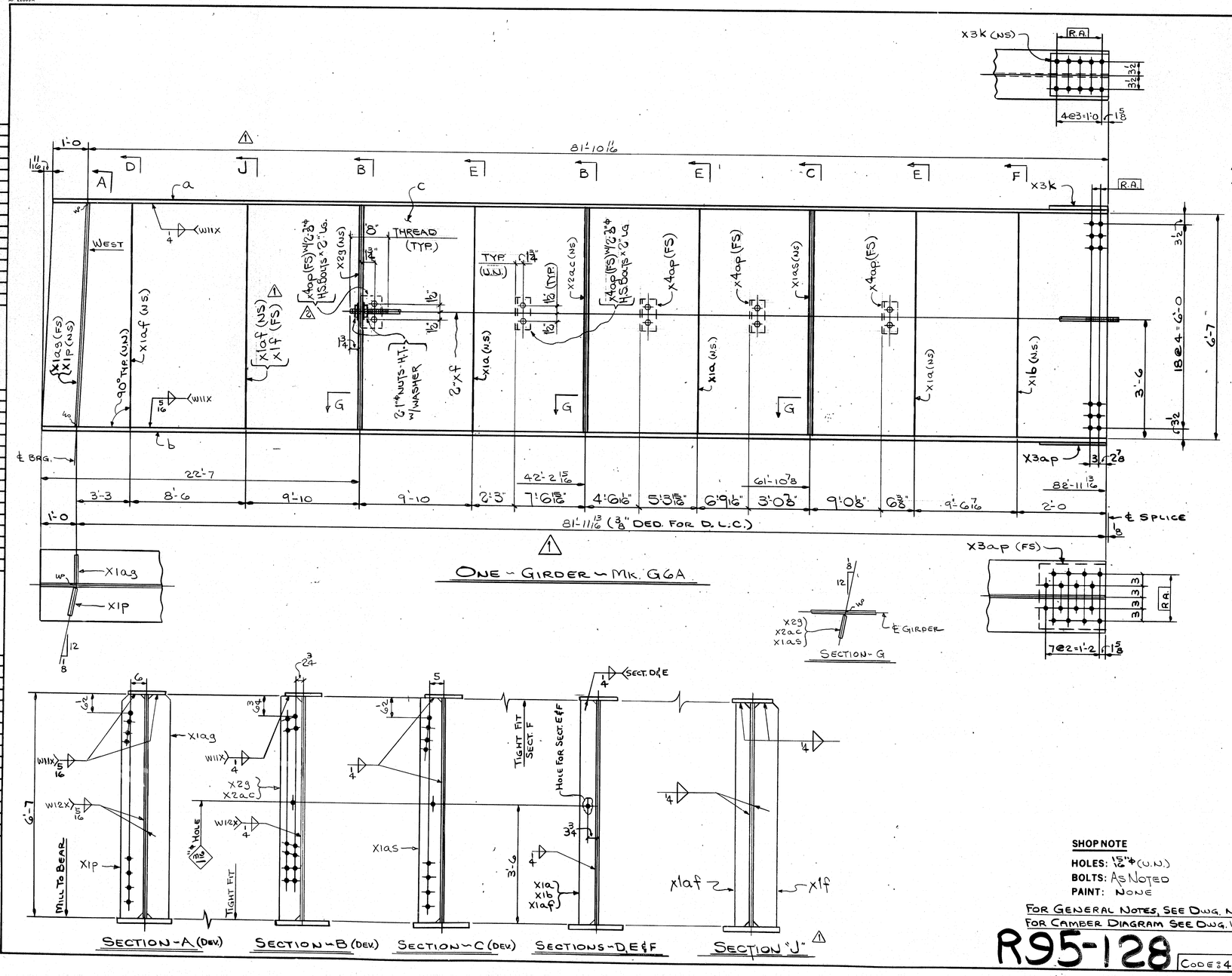

BILL OF MATERIAL

NO.	MARK	DESCRIPTION	LENGTH		REMARKS	ITEM	SHIP. WEIGHT
ONE	G6A	GIRDER					23302
ONE	a	PL 13 x 3/4	82	10 11/16			
ONE	b	PL. 19 x 1 1/2	82	11 13/16			
ONE	c	PL. 79 x 1/2	83	0 3/8			
2	x1f	1" ϕ ROD	60	9 5/8	THD. BOTH ENDS	6/15	
ONE	x1f	PL. 10 x 3/8	6	7			
ONE	x3k	FILL PL. 11 x 1"	1	3 1/8			
ONE	x3ap	FILL PL. 17 x 1/4	1	5 1/8			
3	x1a	BAR 5 x 7/16	6	7			
ONE	x1b	BAR 5 x 7/16					
2	x1ap	BAR 5 x 7/16					
ONE	x1ag	BAR 8 x 1					
	x1p	BAR 8 x 1					
	x2g	BAR 7 x 7/16					
	x2ac	BAR 7 x 7/16					
ONE	x1as	BAR 7 x 7/16	6	7			
5	x4ap	∟5 x 3 x 3/4	0	6			
4		1" ϕ STD. HEX. NUTS				B1/12	
4		WASH. FOR 1" ϕ ROD				B1/8	
10		3/8" ϕ H.S. BOLT	0	2		B1/2	
10		WASHERS FOR 3/8" ϕ H.S. BOLTS				B1/9	

SHOP NOTE

HOLES: 13/16" ϕ (U.N.)
BOLTS: AS NOTED
PAINT: NONE

FOR GENERAL NOTES, SEE DWG. N1.
FOR CAMBER DIAGRAM SEE DWG. W1.

R95-128

CODE: 4000

NO.	REVISION	DATE
2	changed ∟x4an to x4ap	12-14-84
1	contract revision control #14	9-10-84

HIGH STEEL STRUCTURES, INC.
1905 Old Philadelphia Pike
Lancaster, Pennsylvania 17603
Phone 717/299-5211
A Subsidiary of High Industries, Inc

GIRDER G6A
I-395 BRIDGE OVER PENOBSCOT RIVER
I-395 BRIDGE STA. 164+60.00
PENOBSCOT COUNTY
STATE OF MAINE
DEPARTMENT OF TRANSPORTATION

STATE CONTRACT OR REF. NO. 6 CONTRACTOR CIANBRO CORP.
IN CHARGE: HINKLE MADE BY: G.F.Z. CHK.D. BY: CS DATE 6-27-84
CONTRACT NUMBER: ME-84088-1 DRAWING NUMBER: 12 OF 36

FED. ROAD DIV. NO.	STATE	FED. AID PROJ. NO.
1	ME	I-IG-395-8(82)104

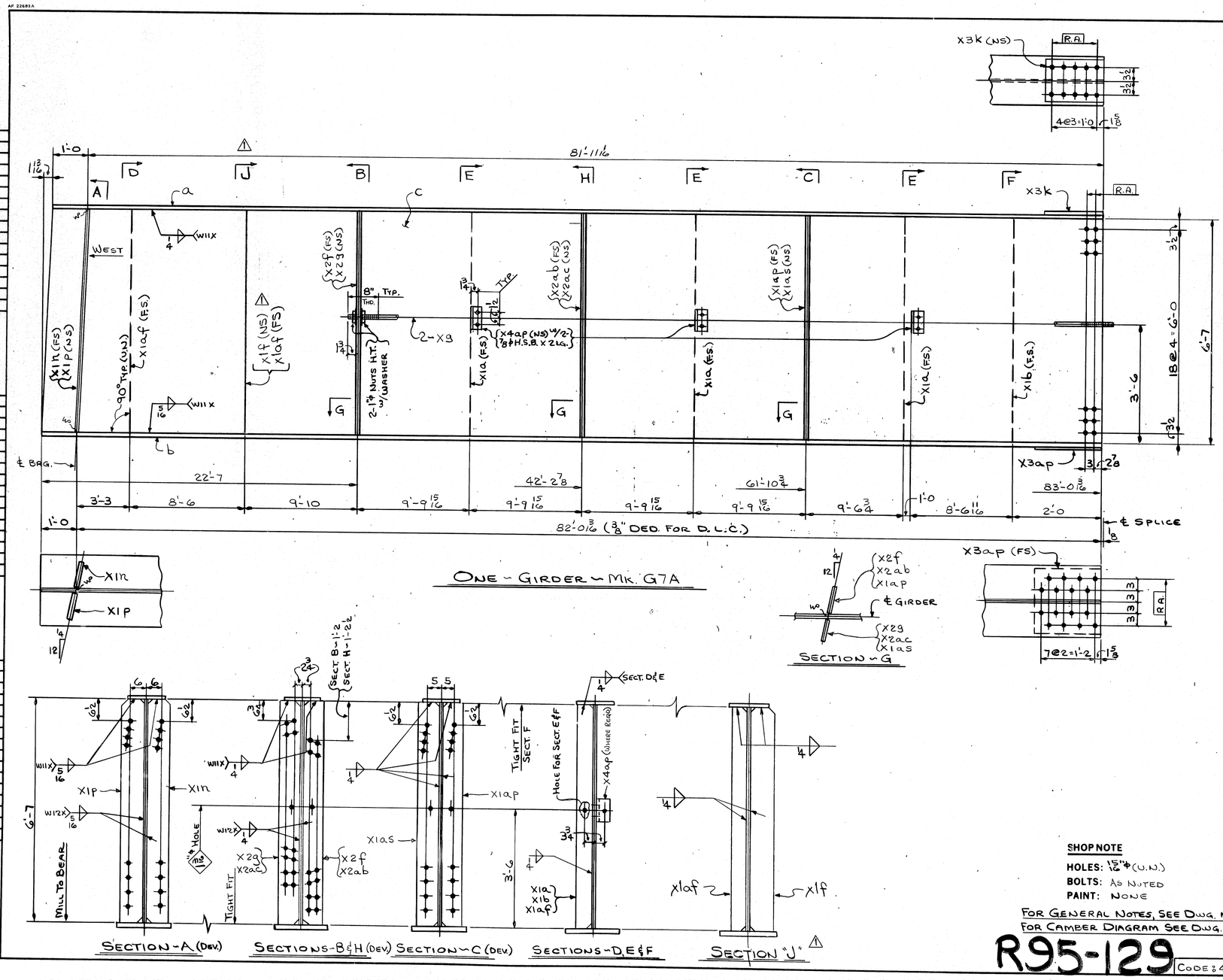

BILL OF MATERIAL

NO.	MARK	DESCRIPTION	LENGTH		REMARKS	ITEM	SHIP. WEIGHT
ONE	G7A	GIRDER					23,554
ONE	a	PL 13 x 3/4	82	11 1/16			
ONE	b	PL. 19 x 1 1/2	83	0 3/16			
ONE	c	PL. 79 x 1/2	83	0 7/8			
2	X9	1 1/4 ROD	60	10 3/8	THD. BOTH ENDS	60/15	
ONE	X1f	PL. 10 x 3/8	6	7			
ONE	X3k	FILL PL. 11 x 1"	1	3 3/8			
ONE	X3ap	FILL PL. 17 x 1/4	1	5 3/8			
3	X1a	BAR 5 x 7/16	6	7			
ONE	X1b	BAR 5 x 7/16					
2	X1af	BAR 5 x 7/16					
ONE	X1n	BAR 8 x 1"					
	X1p	BAR 8 x 1"					
	X2f	BAR 7 x 7/16					
	X2g						
	X2ab						
	X2ac						
	X1ap						
ONE	X1as	BAR 7 x 7/16	6	7			
3	X4ap	L 5 x 3 x 1/4	0	6			
4		1 1/4 STD. HEX. NUTS				B1/12	
4		WASH. FOR 1 1/4 ROD				B1/8	
6		7/8 H.S. BOLTS	0	2		B1/2	
6		WASH. FOR 7/8 H.S. BOLT				B1/9	

SHOP NOTE

HOLES: 15/16" ϕ (U.N.)
BOLTS: AS NOTED
PAINT: NONE

FOR GENERAL NOTES, SEE DWG. N1.
FOR CAMBER DIAGRAM SEE DWG. WC1.

R95-129

CODE: 4000

NO.	REVISION	DATE
1	Contract revision control # 14	9-10-84

HIGH STEEL STRUCTURES, INC.
1905 Old Philadelphia Pike
Lancaster, Pennsylvania 17603
Phone 717/299-5211
A Subsidiary of High Industries, Inc

GIRDER G7A
I-395 BRIDGE OVER PENOBSCOT RIVER
I-395 BRIDGE STA. 164 + 60.00
PENOBSCOT COUNTY
STATE OF MAINE
DEPARTMENT OF TRANSPORTATION

STATE CONTRACT OR REF. NO. 6 CONTRACTOR CIANBRO CORP.
IN CHARGE: HINKLE MADE BY: G.F.Z. CHK.D. BY: CS DATE: 6-27-84
CONTRACT NUMBER: ME-84088-1 DRAWING NUMBER: 13 OF 36

© 1984 POLYTRACE 038

FED. ROAD DIV. NO.	STATE	FED. AID PROJ. NO.
1	ME	I-IG-395-8(82)D4

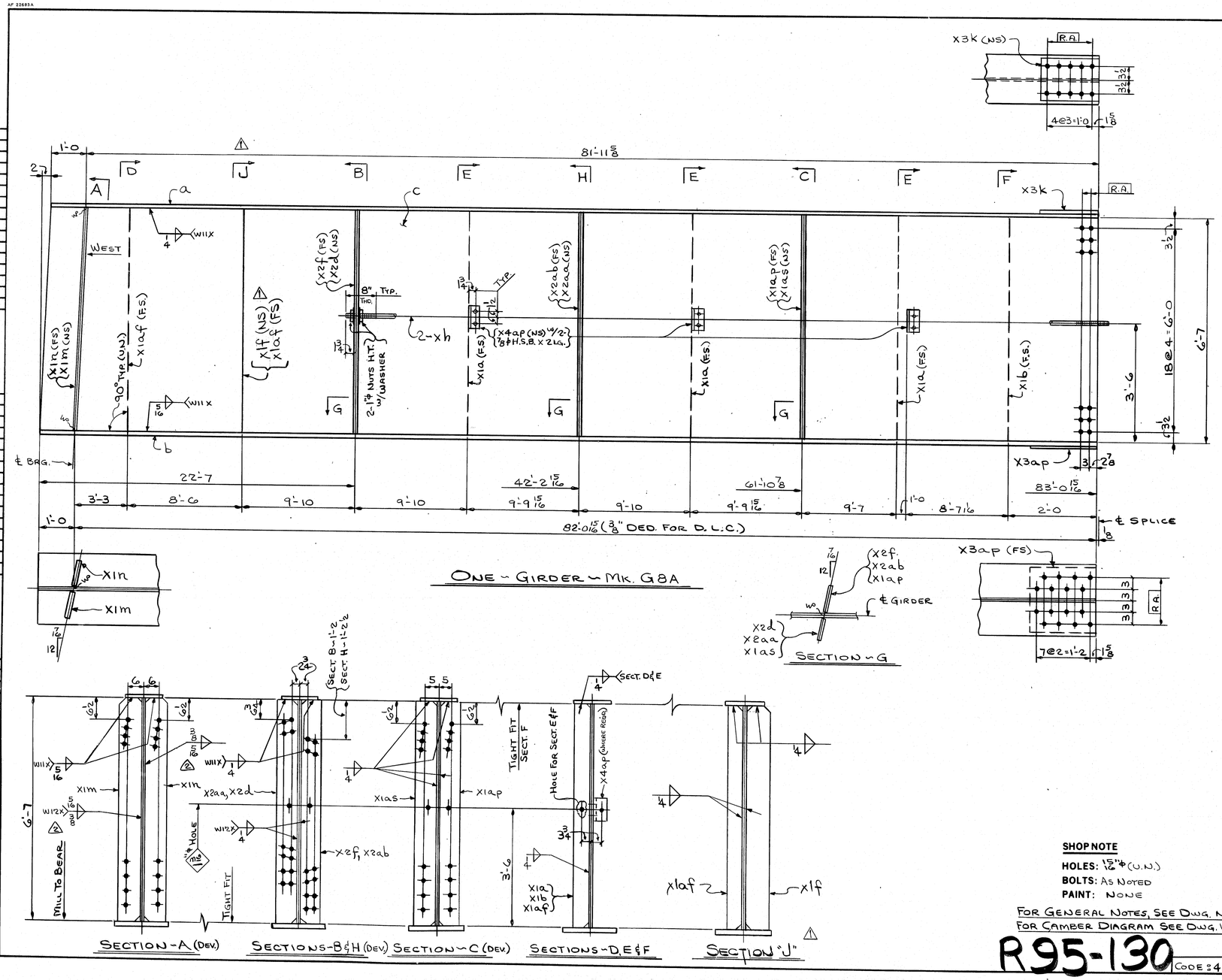

BILL OF MATERIAL

NO.	MARK	DESCRIPTION	LENGTH		REMARKS	ITEM	SHIP WEIGHT
ONE	G8A	GIRDER					73549
ONE	a	PL 13 x 3/4	82	11 5/8			
ONE	b	PL. 19 x 1 1/2	83	0 15/16			
ONE	c	PL. 79 x 1 1/2	83	1 5/8			
2	xh	1"φ ROD	60	10 3/8	THD. BOTH ENDS	6/16	
ONE	x1f	PL. 10 x 3/8	6	7			
ONE	x3k	FILL PL. 11 x 1"	1	3 3/8			
ONE	x3ap	FILL PL. 17 x 1/4	1	5 5/8			
3	x1a	BAR 5 x 7/16	6	7			
ONE	x1b	BAR 5 x 7/16					
2	x1ap	BAR 5 x 7/16					
ONE	x1n	BAR 8 x 1"					
	x1m	BAR 8 x 1"					
	x2f	BAR 7 x 7/16					
	x2d						
	x2aa						
	x2ab						
	x1ap						
ONE	x1as	BAR 7 x 7/16	6	7			
3	x4ap	L 5 x 3 x 1/4	0	6			
4		1"φ STD. HEX. NUTS				B1/12	
4		WASH. FOR 1"φ ROD				B1/8	
6		7/8"φ H.S. BOLTS	0	2		B1/2	
6		WASH. FOR 7/8"φ H.S. BOLT				B1/9	

SHOP NOTE

HOLES: 15/16"φ (W.N.)
BOLTS: As Noted
PAINT: None

For General Notes, See Dwg. N1.
For Camber Diagram See Dwg. WC1.

R95-130

CODE: 4000

NO.		REVISION	DATE
NO. 2		REVISION changed weld sizes	DATE 1-3-85
NO. 1		REVISION contract revision control #14	DATE 9-10-84

HIGH STEEL STRUCTURES, INC.
1905 Old Philadelphia Pike
Lancaster, Pennsylvania 17603
Phone 717/299-5211
A Subsidiary of High Industries, Inc

GIRDER G8A
I-395 BRIDGE OVER PENOBSCOT RIVER
I-395 BRIDGE STA. 164 + 60.00
PENOBSCOT COUNTY
STATE OF MAINE
DEPARTMENT OF TRANSPORTATION

STATE CONTRACT OR REF. NO. 6 CONTRACTOR CIANBRO CORP.
IN CHARGE: HINKLE MADE BY: G.F.Z. CHK.D. BY: CS DATE: 6-28-84
CONTRACT NUMBER: ME-84088-1 DRAWING NUMBER: 14 OF 36

AF 22693A
© 1984 POLYTRACE 038

FED. ROAD DIV. NO.	STATE	FED. AID PROJ. NO.
1	ME	I-IG-395-8(82)174

BILL OF MATERIAL

NO.	MARK	DESCRIPTION	LENGTH		REMARKS	ITEM	UNIT WEIGHT
ONE	G9A	GIRDER					23,564
ONE	a	PL 13 x 3/4	83	0 7/16			
ONE	b	PL. 19 x 1 1/2	83	1 3/4			
ONE	c	PL. 79 x 1/2	83	2 7/16			
2	x1k	1" ϕ ROD	60	11 3/4	THD. BOTH ENDS	S/17	
ONE	x1f	PL. 10 x 3/8	6	7			
ONE	x3k	FILL PL. 11 x 1"	1	3 5/8			
ONE	x3ap	FILL PL. 17 x 1/4	1	5 5/8			
3	x1a	BAR 5 x 7/16	6	7			
ONE	x1b	BAR 5 x 7/16					
2	x1ap	BAR 5 x 7/16					
ONE	x1k	BAR 8 x 1"					
	x1h	BAR 8 x 1"					
	x2c	BAR 7 x 7/16					
	x2b						
	x2w						
	x2y						
	x1aP						
ONE	x1an	BAR 7 x 7/16	6	7			
3	x4aP	L 5 x 3 x 1/4	0	6			
4		1" ϕ STD. HEX NUTS				B1/12	
4		WASH. FOR 1" ϕ ROD				B1/8	
6		7/8" ϕ H.S. BOLTS	0	2		B1/2	
6		WASH. FOR 7/8" ϕ H.S. BOLT				B1/9	

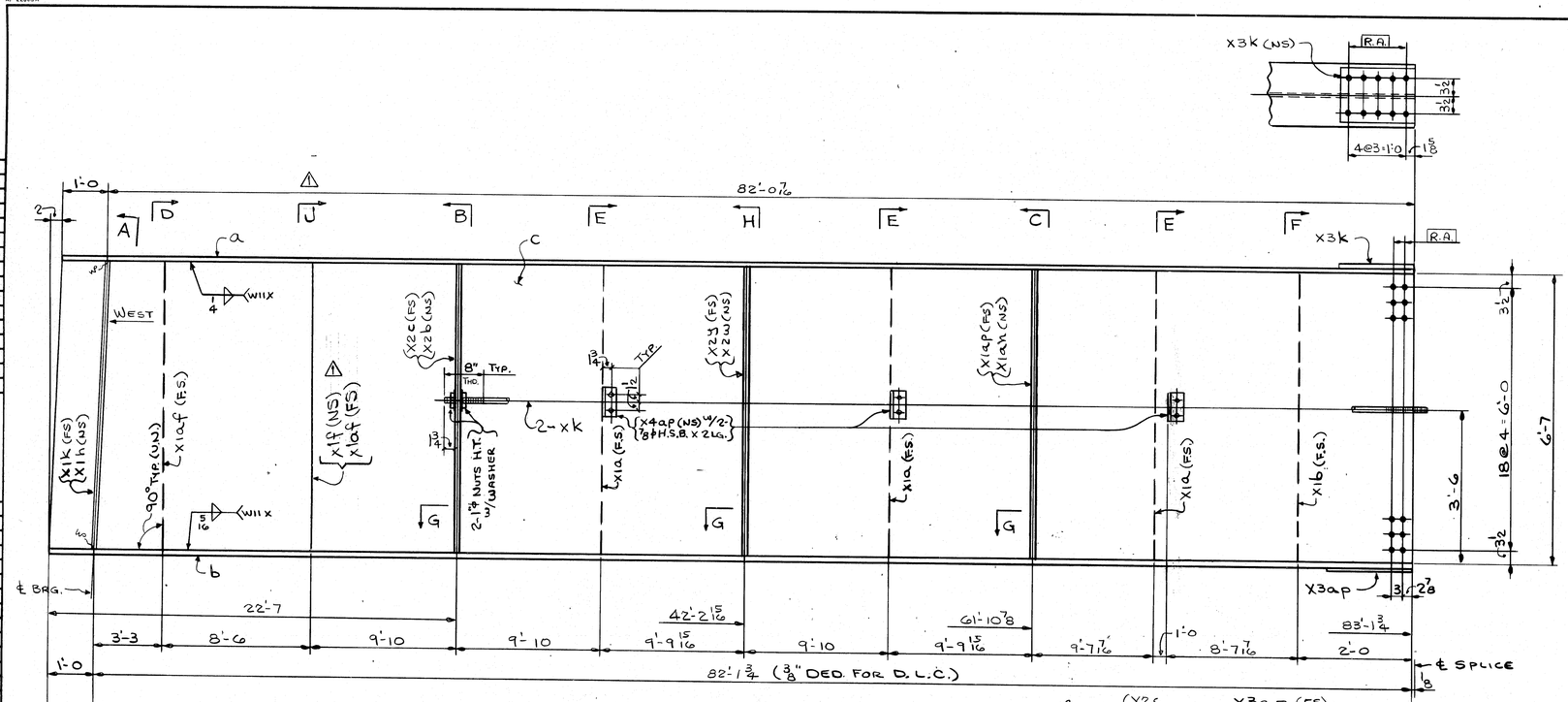

ONE ~ GIRDER ~ MK. G9A

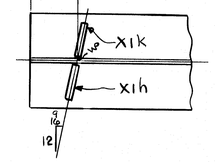

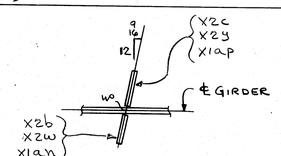

SECTION ~ G

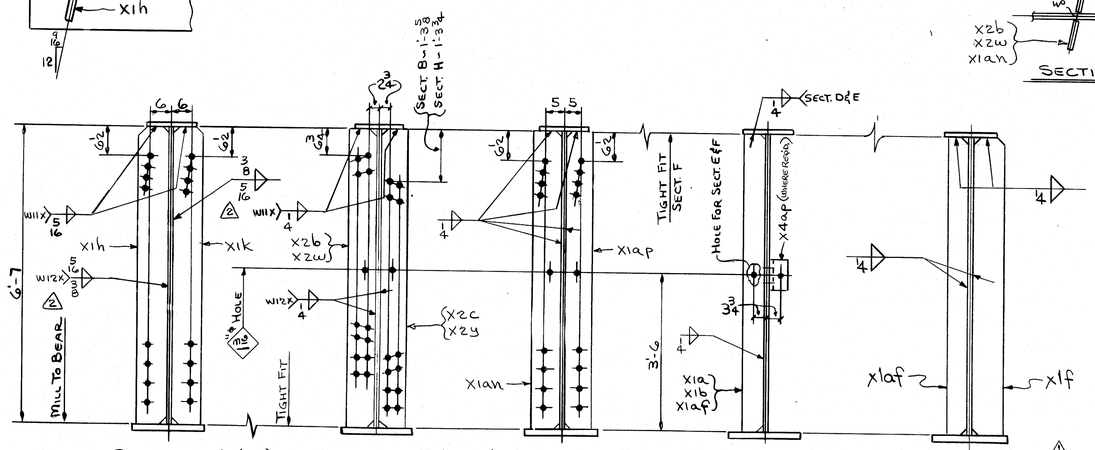

SECTION ~ A (DEV.) SECTIONS ~ B & H (DEV.) SECTION ~ C (DEV.) SECTIONS ~ D, E & F SECTION "J"

SHOP NOTE

HOLES: 15/16" ϕ (UN)

BOLTS: AS NOTED

PAINT: NONE

FOR GENERAL NOTES, SEE DWG N1.

FOR CAMBER DIAGRAM SEE DWG W1.

R95-131

CODE: 4000

NO.	REVISION	DATE
2	CHANGED WELD SIZES	1-3-85
1	contract revision control #14	9-10-84

HIGH STEEL STRUCTURES, INC.
1900 Old Philadelphia Pike
Lancaster, Pennsylvania 17603
Phone 717 299-5211
A Subsidiary of High Industries Inc

GIRDER G9A
I-395 BRIDGE OVER PENOBSCOT RIVER
I-395 BRIDGE STA. 164 + 60.00
PENOBSCOT COUNTY
STATE OF MAINE
DEPARTMENT OF TRANSPORTATION

STATE CONTRACT OR REF NO 6 CONTRACTOR CIANBRO CORP.

IN CHARGE HINKLE MADE BY G.F.Z. CHK'D BY CS DATE 6-28-84

CONTRACT NUMBER ME-84088-1 DRAWING NUMBER 15 OF 36

© GMAP POLYTRACE 028

FED. ROAD DIV. NO.	STATE	FED AID PROJ. NO.
1	ME	I-IG-395-8(82)174

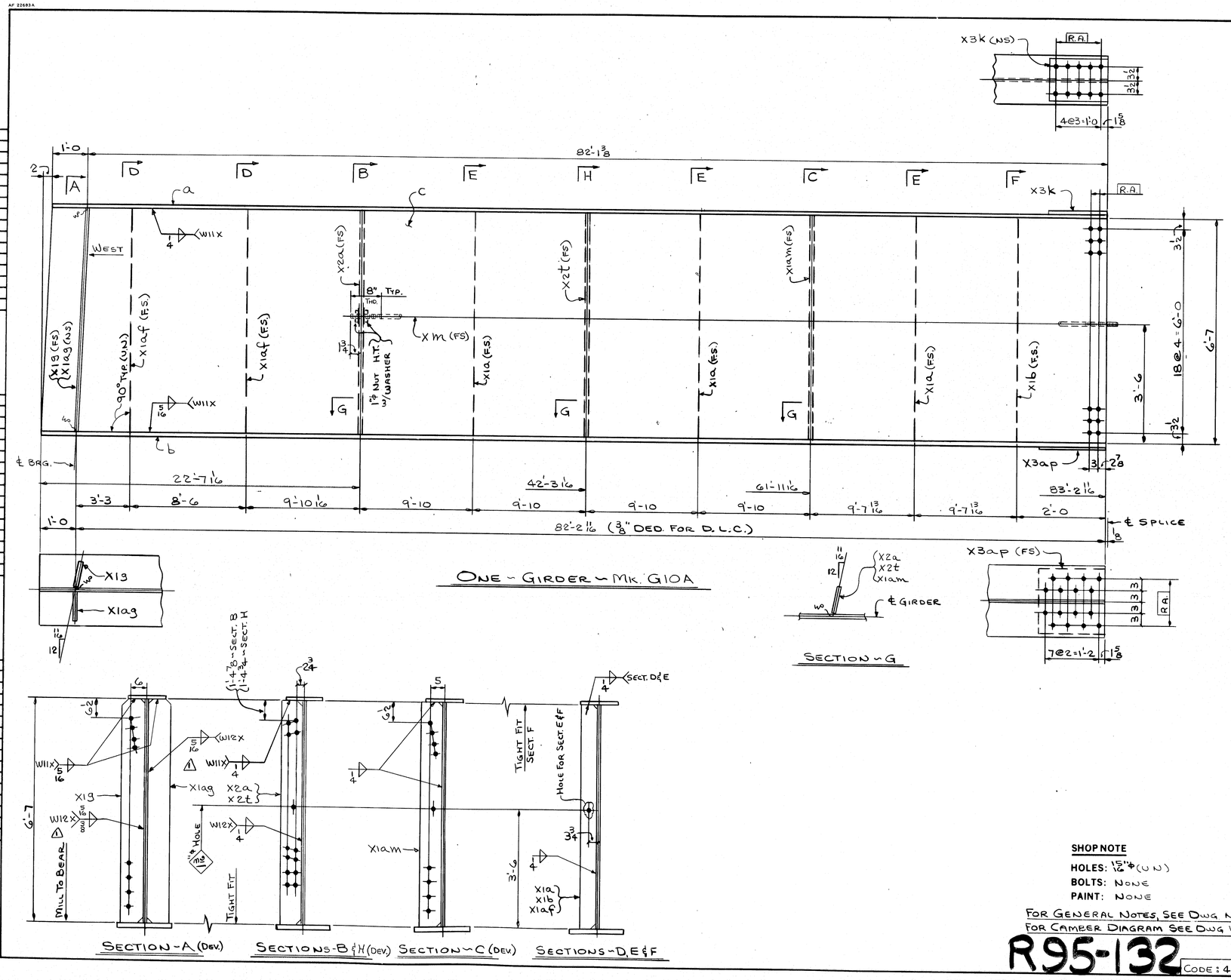

BILL OF MATERIAL

NO.	MARK	DESCRIPTION	LENGTH		REMARKS	ITEM	SHIP. WEIGHT
ONE	G10A	GIRDER					23,120
ONE	a	PL 13 x 3/4	83	1 5/8			
ONE	b	PL .79 x 1 1/2	83	2 11/16			
ONE	c	PL .79 x 1 1/2	83	3 3/8			
ONE	Xm	1 1/4" ROD	61	0 5/8	THD. BOTH ENDS	6/18	
ONE	X3k	FILL PL .11 x 1"	1	3 1/8			
ONE	X3ap	FILL PL .17 x 1/4	1	5 1/8			
3	X1a	BAR 5 x 7/16	6	7			
ONE	X1b	BAR 5 x 7/16	↑	↑			
2	X1af	BAR 5 x 7/16					
ONE	X1g	BAR 8 x 1					
↑	X1ag	BAR 8 x 1					
	X2a	BAR 7 x 7/16					
↓	X2t	BAR 7 x 7/16	↓	↓			
ONE	X1am	BAR 7 x 7/16	6	7			
2		1 1/4" STD. HEX. NUTS				81/12	
2		WASH. FOR 1 1/4" ROD				81/8	

SHOP NOTE

HOLES: 15/16" ϕ (U.N.)
BOLTS: NONE
PAINT: NONE

FOR GENERAL NOTES, SEE DWG N1.
FOR CAMBER DIAGRAM SEE DWG W1.

R95-132

CODE: 4000

NO.	REVISION	DATE
1	CHANGED WELD SIZES	1-3-85

HIGH STEEL STRUCTURES, INC.
1905 Old Philadelphia Pike
Lancaster, Pennsylvania 17603
Phone 717 299-5211
A Subsidiary of High Industries, Inc.

GIRDER G10A
I-395 BRIDGE OVER PENOBSCOT RIVER
I-395 BRIDGE STA. 164 + 60.00
PENOBSCOT COUNTY
STATE OF MAINE
DEPARTMENT OF TRANSPORTATION

STATE CONTRACT OR REF. NO. 6 CONTRACTOR CIANBRO CORP.
IN CHARGE HINKLE MADE BY G.F.Z. CHK'D BY CS DATE 6-28-84
CONTRACT NUMBER ME-84088-1 DRAWING NUMBER 16 OF 36

AF 22683A
© Grafic POLYTRACE 036

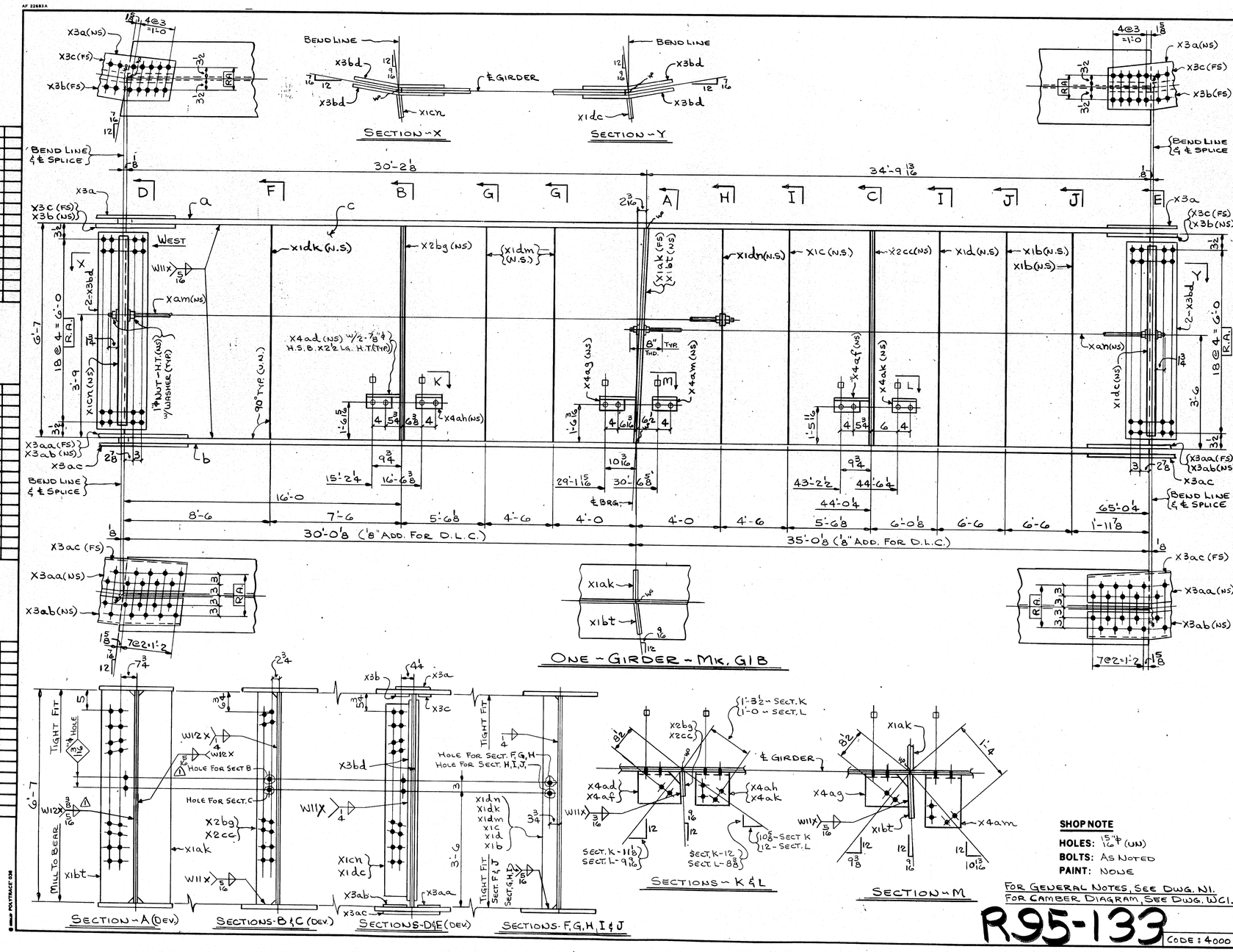

FED. ROAD DIV. NO.	STATE	FED. AID PROJ. NO.
1	ME	I-IG-395-8(82)176

BILL OF MATERIAL

NO.	MARK	DESCRIPTION	LENGTH		REMARKS	ITEM	SHIP. WEIGHT
ONE	G1B	GIRDER					32,740
ONE	a	PL. 27 x 1 5/8	65	0 1/16			
ONE	b	PL. 27 x 1 5/8	65	0 3/4			
ONE	c	PL. 79 x 9/16	65	0 4			
ONE	Xam	1 1/4 ROD	34	4 1/4	THD. BOTH ENDS	6/3	
ONE	Xan	1 1/4 ROD	35	3 1/8	THD. BOTH ENDS	6/3	
2	x1b	BAR 5 x 7/16	6	7			
ONE	x1c	BAR 6 x 9/16					
ONE	x1d	BAR 5 x 7/16					
ONE	x1dk	BAR 5 x 7/16					
2	x1dm	BAR 6 x 9/16					
ONE	x1dn	BAR 6 x 7/16					
ONE	x1ak	PL. 12 x 1 3/8					
ONE	x1bt	PL. 12 x 1 3/8					
ONE	x2bg	BAR 7 x 7/16					
ONE	x2cc	BAR 7 x 7/16	6	7			
ONE	x1cn	BAR 8 x 1/2	6	1			
ONE	x1dc	BAR 8 x 1/2	6	1			
2	x3a	PL. 11 1/2 x 1/2	2	6 1/2			
	x3b	BAR 4 1/2 x 3/4	2	6 1/2			
	x3c	BAR 4 1/2 x 3/4	2	6 1/2			
	x3aa	PL. 8 5/8 x 1"	2	10 1/2			
	x3ab	PL. 8 5/8 x 1"	2	10 1/2			
2	x3ac	PL. 17 5/8 x 7/8	2	10 1/2			
4	x3bd	BENT PL. 75 x 1/2	1	3			
ONE	x4ad	PL. MC 18 x 45.8	0	11 15/16			
	x4af		0	11 15/16			
	x4ag		0	11 15/16			
	x4ah		0	9 1/4			
	x4ak		0	8 1/2			
ONE	x4am	PL. MC 18 x 45.8	0	9 1/2			
12		7/8" H.S. BOLTS	0	2 1/2		B1/4	
12		WASH. FOR 7/8" H.S. BOLT				B1/9	
8		1 1/4 STD. HEX. NUTS				B1/12	
8		WASH. FOR 1 1/4 ROD				B1/8	

SHOP NOTE

HOLES: 15/16" ϕ (UN)
BOLTS: AS NOTED
PAINT: NONE

FOR GENERAL NOTES, SEE DWG. N1.
FOR CAMBER DIAGRAM, SEE DWG. W1.

R95-133

CODE : 4000

NO.	REVISION	DATE
1	CHANGED WELD SIZES	1-3-85

HIGH STEEL STRUCTURES, INC.
1905 Old Philadelphia Pike
Lancaster, Pennsylvania 17603
Phone 717/299-5211
A Subsidiary of High Industries, Inc

GIRDER G1B
I-395 BRIDGE OVER PENOBSCOT RIVER
I-395 BRIDGE STA. 164+60.00
PENOBSCOT COUNTY
STATE OF MAINE
DEPARTMENT OF TRANSPORTATION

STATE CONTRACT OR REF. NO. 6 CONTRACTOR GANBRO CORP.
IN CHARGE: HINKLE MADE BY: G.F.X. CHK.D. BY: CS DATE: 6-28-84
CONTRACT NUMBER: ME-84088-1 DRAWING NUMBER: 17 OF 36

AF 22683A

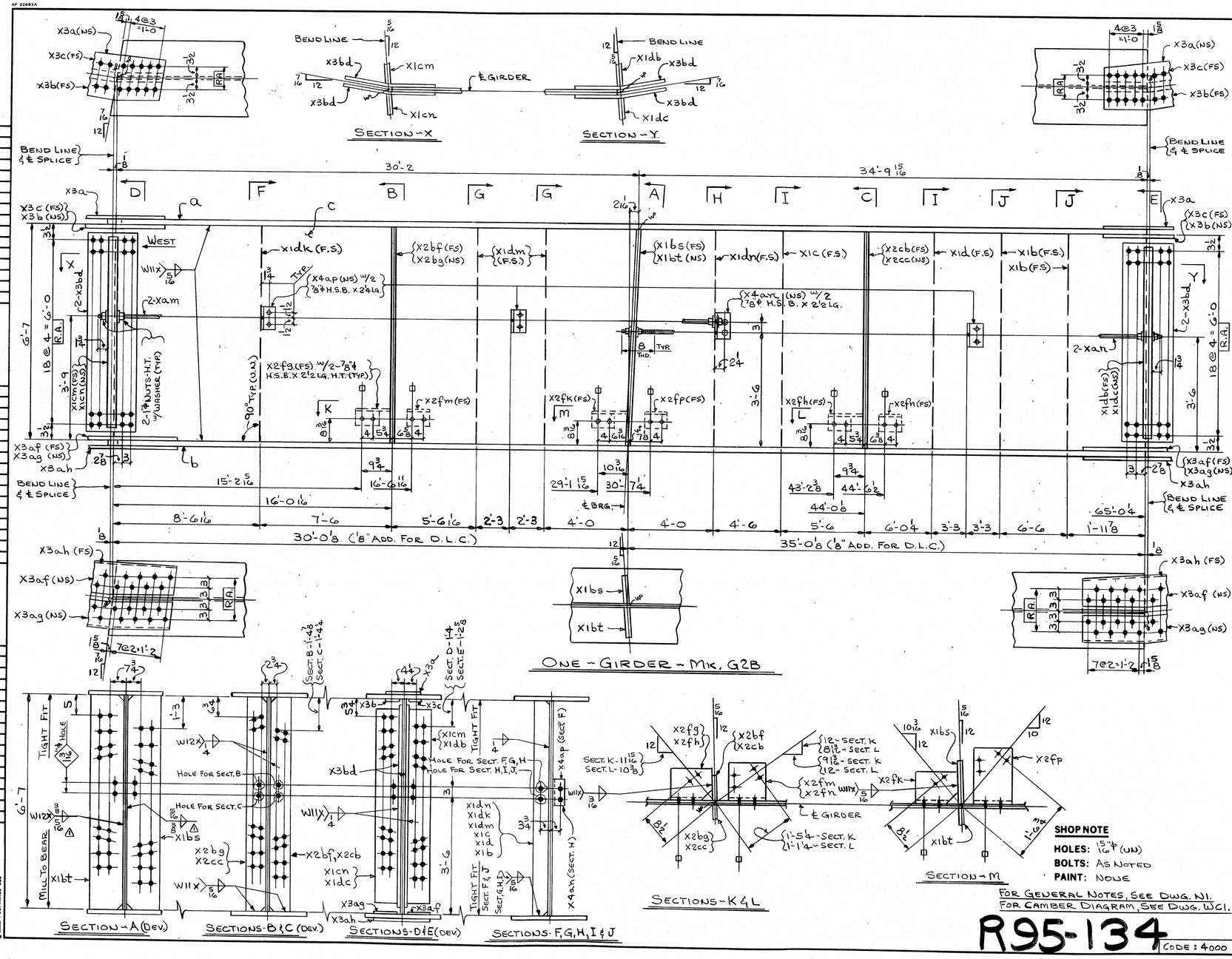

FED. ROAD DIV. NO.	STATE	FED. AID PROJ. NO.
1	ME	I-IG-395-8(82)176

BILL OF MATERIAL

NO.	MARK	DESCRIPTION	LENGTH		REMARKS	ITEM	SHIP. WEIGHT
ONE	G2B	GIRDER					33,255
ONE	a	PL. 27 x 1 5/8	65	0 7/16			
ONE	b	PL. 27 x 1 5/8	65	0 3/4			
ONE	c	PL. 79 x 9/16	65	0 4			
2	Xam	1"φ ROD	34	4 4	THD. BOTH ENDS	6/3	
2	Xan	1"φ ROD	35	3 1/8	THD. BOTH ENDS	6/3	
2	x1b	BAR 5 x 7/16	6	7			
ONE	x1c	BAR 6 x 9/16					
ONE	x1d	BAR 5 x 7/16					
ONE	x1dk	BAR 5 x 7/16					
2	x1dm	BAR 6 x 9/16					
ONE	x1dn	BAR 6 x 9/16					
	x1bs	PL. 12 x 1 3/8					
	x1bt	PL. 12 x 1 3/8					
	x2bf	BAR 7 x 7/16					
	x2bg						
	x2cb						
	x2cc	BAR 7 x 7/16	6	7			
	x1cm	BAR 8 x 1/2	6	1			
	x1cn						
	x1db						
ONE	x1dc	BAR 8 x 1/2	6	1			
3	x4ap	∟5 x 3 x 1/4	0	6			
ONE	x4an	∟5 x 3 1/2 x 1/2	0	6			
2	x3a	PL. 11 1/2 x 1/2	2	6 1/2			
	x3b	BAR 4 1/2 x 3/4	2	6 1/2			
	x3c	BAR 4 1/2 x 3/4	2	6 1/2			
	x3af	PL. 8 1/2 x 1"	2	10 1/2			
	x3ag	PL. 8 1/2 x 1"	2	10 1/2			
2	x3ah	PL. 17 1/2 x 7/8	2	10 1/2			
4	x3bd	BENT PL. 7.5 x 1/2	1	3			
16		1"φ STD. HEX NUTS				BI/12	
16		WASH. FOR 1"φ ROD				BI/8	
6		7/8"φ H.S. BOLTS	0	2 1/4		BI/3	
14		7/8"φ H.S. BOLTS	0	2 1/2		BI/4	
20		WASH. FOR 7/8"φ H.S. BOLTS				BI/9	
ONE	x2fg	PL. MC18 x 45.8	0	11 1/2			
	x2fh		0	11 1/2			
	x2fk		0	11 1/2			
	x2fm		0	10 1/4			
	x2fn		0	9 3/4			
ONE	x2fp	PL. MC18 x 45.8	0	11 1/2			

NO.	REVISION	DATE
1	CHANGED WELD SIZES	1-3-85

HIGH STEEL STRUCTURES, INC.
1905 Old Philadelphia Pike
Lancaster, Pennsylvania 17603
Phone 717/299-5211
A Subsidiary of High Industries, Inc

GIRDER G2B
I-395 BRIDGE OVER PENOBSCOT RIVER
I-395 BRIDGE STA. 164+60.00
PENOBSCOT COUNTY
STATE OF MAINE
DEPARTMENT OF TRANSPORTATION

STATE CONTRACT OR REF. NO. 6 CONTRACTOR GANBRO CORP.
IN CHARGE: HINKLE MADE BY: G.F.X. CHK.D. BY: CS DATE: 6-28-84
CONTRACT NUMBER: ME-84088-1 DRAWING NUMBER: 18 OF 36

AF 22683A

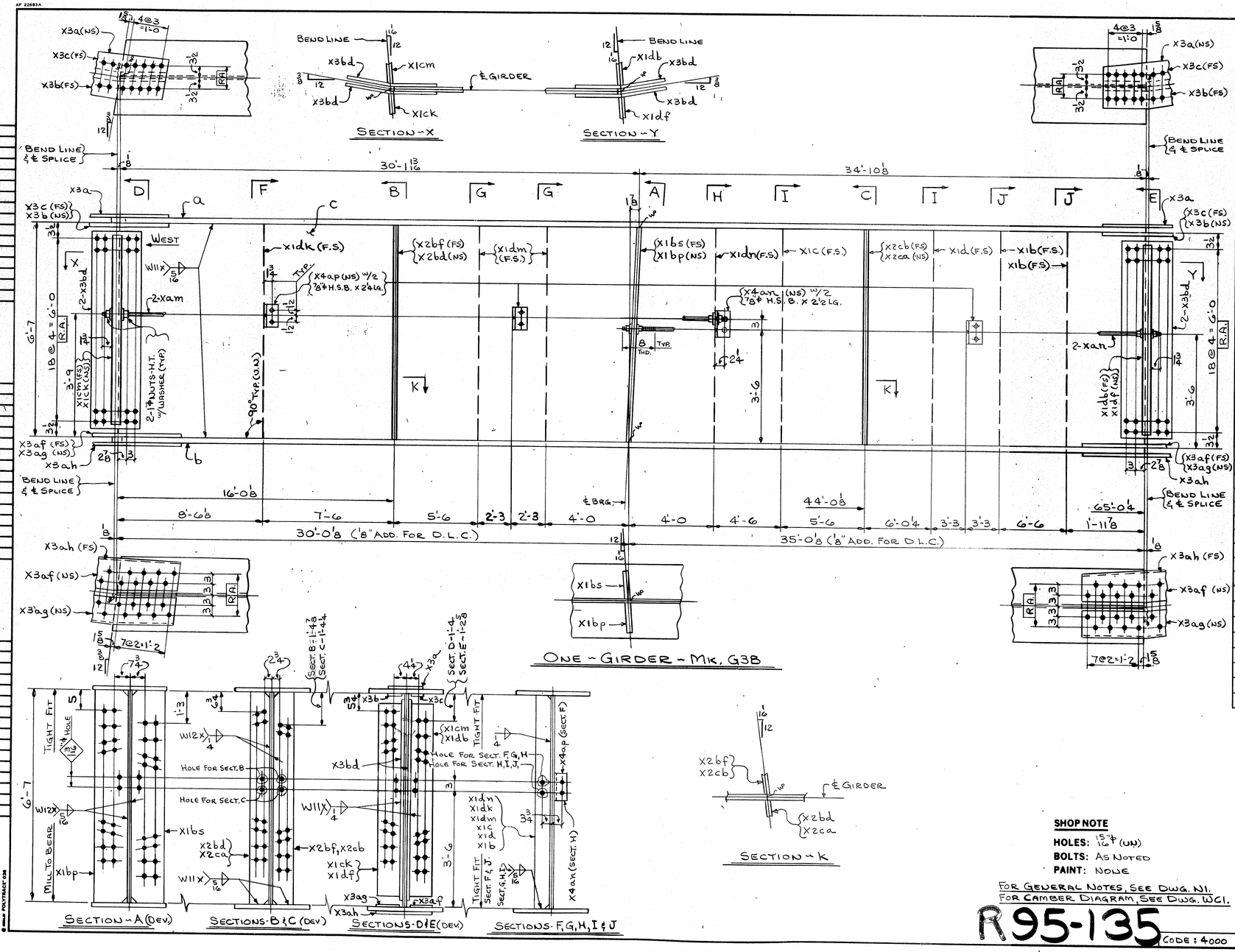

FED. ROAD DIV. NO.	STATE	FED. AID PROJ. NO.
1	ME	I-IG-395-8(82)176

BILL OF MATERIAL

NO.	MARK	DESCRIPTION	LENGTH		REMARKS	ITEM	SHIP. WEIGHT
ONE	G3B	GIRDER					32,995
ONE	a	PL. 27 x 1 5/8	65	0 3/8			
ONE	b	PL. 27 x 1 5/8	65	0 11/16			
ONE	c	PL. 79 x 9/16	65	0 1/4			
2	Xam	1"ϕ ROD	34	4 1/4	THD. BOTH ENDS	6/3	
2	Xan	1"ϕ ROD	35	3 1/8	THD. BOTH ENDS	6/3	
2	X1b	BAR 5 x 7/16	6	7			
ONE	X1c	BAR 6 x 7/16					
ONE	X1d	BAR 5 x 7/16					
ONE	X1dk	BAR 5 x 7/16					
2	X1dm	BAR 6 x 7/16					
ONE	X1dn	BAR 6 x 7/16					
	X1bs	PL. 12 x 1 3/8					
	X1bp	PL. 12 x 1 3/8					
	X2bd	BAR 7 x 7/16					
	X2bf						
	X2ca						
	X2cb	BAR 7 x 7/16	6	7			
	X1cm	BAR 8 x 1/2	6	1			
	X1ck						
	X1db						
ONE	X1df	BAR 8 x 1/2	6	1			
3	X4ap	∟ 5 x 3 x 1/4	0	6			
ONE	X4an	∟ 5 x 3 1/2 x 1/2	0	6			
2	X3a	PL. 11 1/2 x 1/2	2	6 1/2			
	X3b	BAR 4 1/2 x 3/4	2	6 1/2			
	X3c	BAR 4 1/2 x 3/4	2	6 1/2			
	X3af	PL. 8 1/2 x 1"	2	10 1/2			
	X3ag	PL. 8 1/2 x 1"	2	10 1/2			
2	X3ah	PL. 17 1/2 x 7/8	2	10 1/2			
4	X3bd	BENT PL. 7 5 x 1/2	1	3			
16		1"ϕ STD. HEX NUTS				B1/12	
16		WASH. FOR 1"ϕ ROD				B1/8	
6		7/8"ϕ H.S. BOLTS	0	2 1/4		B1/3	
2		7/8"ϕ H.S. BOLTS	0	2 1/2		B1/4	
8		WASH. FOR 7/8"ϕ H.S. BOLTS				B1/9	

NO.	REVISION	DATE

HIGH STEEL STRUCTURES, INC.
1905 Old Philadelphia Pike
Lancaster, Pennsylvania 17603
Phone 717/299-5211
A Subsidiary of High Industries, Inc

GIRDER G3B
I-395 BRIDGE OVER PENOBSCOT RIVER
I-395 BRIDGE STA. 164+60.00
PENOBSCOT COUNTY
STATE OF MAINE
DEPARTMENT OF TRANSPORTATION

STATE CONTRACT OR REF. NO. 6 CONTRACTOR GANBRO CORP.
IN CHARGE: HINKLE MADE BY G.F.Z. CHK'D. BY CS DATE 6-22-84
CONTRACT NUMBER: ME-84088-1 DRAWING NUMBER: 19 OF 36

SHOP NOTE
HOLES: 15/16"ϕ (UN)
BOLTS: AS NOTED
PAINT: NONE

FOR GENERAL NOTES, SEE DWG. N1.
FOR CAMBER DIAGRAM, SEE DWG. WC1.

R95-135

CODE: 4000

© 1984 POLYTRACE 028

FED. ROAD DIV. NO.	STATE	FED. AID PROJ. NO.
1	ME	I-IG-395-8(82)176

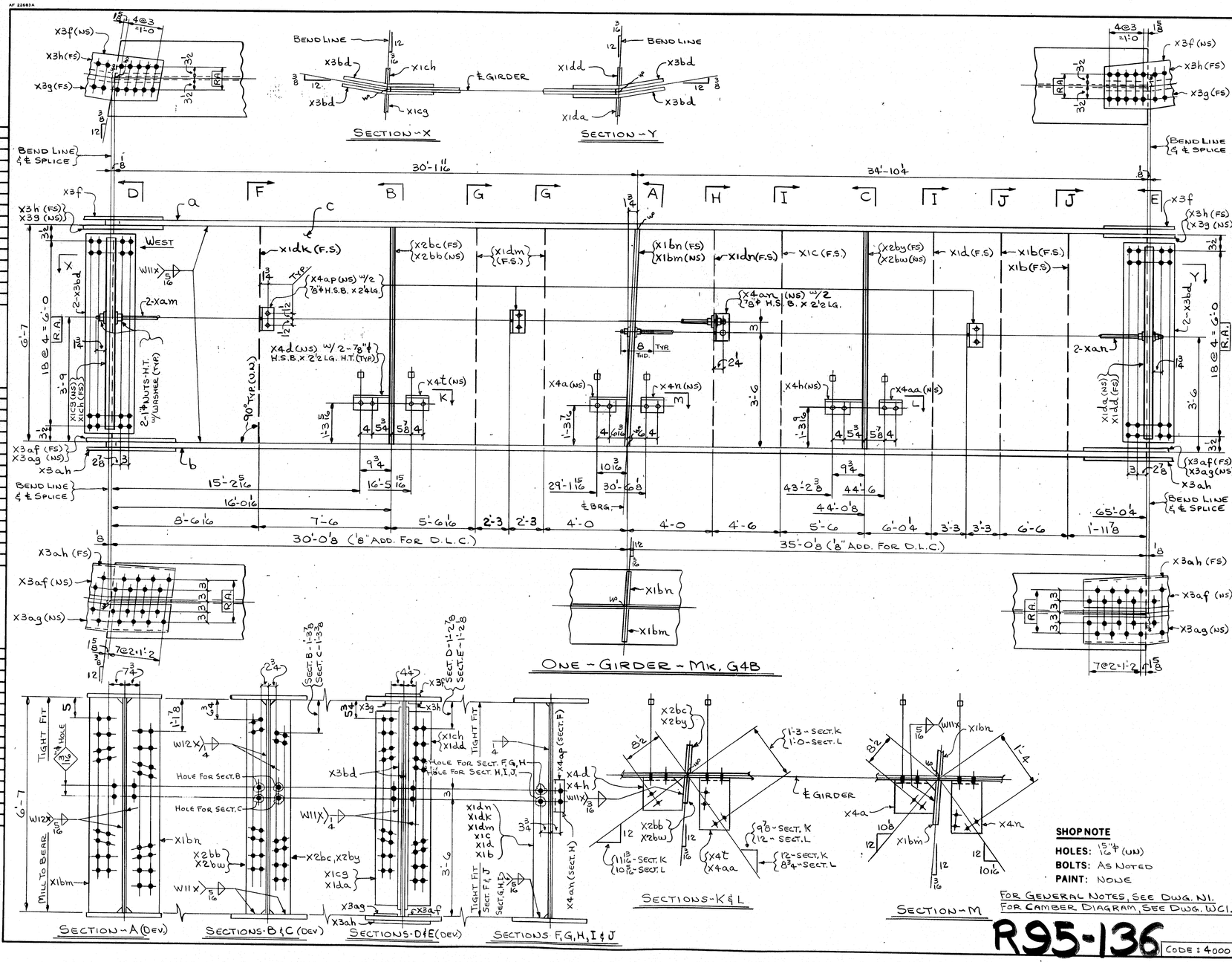

SHOP NOTE

HOLES: 15/16" (UN)

BOLTS: AS NOTED

PAINT: NONE

FOR GENERAL NOTES, SEE DWG. N1.
FOR CAMBER DIAGRAM, SEE DWG. W C1.

R95-136

CODE: 4000

BILL OF MATERIAL

NO.	MARK	DESCRIPTION	LENGTH		REMARKS	ITEM	SHIP. WEIGHT
ONE	G4B	GIRDER					33,175.
ONE	a	PL. 27 x 1 5/8	65	0 3/8			
ONE	b	PL. 27 x 1 5/8	65	0 11/16			
ONE	c	PL. 79 x 9/16	65	0 1/4			
2	Xam	1"ϕ ROD	34	4 1/4	THD. BOTH ENDS	6/3	
2	Xan	1"ϕ ROD	35	3 1/8	THD. BOTH ENDS	6/3	
2	X1b	BAR 5 x 7/16	6	7			
ONE	X1c	BAR 6 x 9/16					
ONE	X1d	BAR 5 x 7/16					
ONE	X1dk	BAR 5 x 7/16					
2	X1dm	BAR 6 x 9/16					
ONE	X1dn	BAR 6 x 9/16					
	X1bn	PL. 12 x 1 3/8					
	X1bm	PL. 12 x 1 3/8					
	X2bb	BAR 7 x 7/16					
	X2bc						
	X2bw						
	X2by	BAR 7 x 7/16	6	7			
	X1c9	BAR 8 x 1/2	6	1			
	X1ch						
	X1da						
ONE	X1dd	BAR 8 x 1/2	6	1			
3	X4ap	L 5 x 3 x 1/4	0	6			
ONE	X4an	L 5 x 3 1/2 x 1/2	0	6			
2	X3f	PL. 11 3/8 x 1/2	2	6 1/2			
	X33	BAR 4 3/8 x 3/4	2	6 1/2			
	X3h	BAR 4 3/8 x 3/4	2	6 1/2			
	X3af	PL. 8 1/2 x 1"	2	10 1/2			
	X3ag	PL. 8 1/2 x 1"	2	10 1/2			
2	X3ah	PL. 17 1/2 x 7/8	2	10 1/2			
4	X3bd	BENT PL. 7 5/8 x 1/2	1	3			
16		1"ϕ STD. HEX NUTS				BI 12	
16		WASH. FOR 1"ϕ ROD				BI 8	
6		7/8"ϕ H.S. BOLTS	0	2 1/4		BI 3	
14		7/8"ϕ H.S. BOLTS	0	2 1/2		BI 4	
20		WASH. FOR 7/8"ϕ H.S. BOLTS				BI 9	
ONE	X4a	PL. MC18 x 45.8	0	11 7/16			
	X4h		0	11 7/16			
	X4d		0	11 7/16			
	X4n		0	10			
	X4t		0	8 1/2			
ONE	X4aa	PL. MC18 x 45.8	0	8 1/2			

NO.	REVISION	DATE

HIGH STEEL STRUCTURES, INC.
1905 Old Philadelphia Pike
Lancaster, Pennsylvania 17603
Phone 717/299-5211
A Subsidiary of High Industries Inc

GIRDER G4B
I-395 BRIDGE OVER PENOBSCOT RIVER
I-395 BRIDGE STA. 164+60.00
PENOBSCOT COUNTY
STATE OF MAINE
DEPARTMENT OF TRANSPORTATION

STATE CONTRACT OR REF. NO. 6 CONTRACTOR GAMBRO CORP.
IN CHARGE HINKLE MADE BY: G.F.Z. CHK.D BY: CS DATE 6-28-84
CONTRACT NUMBER ME-84088-1 DRAWING NUMBER 20 OF 36

AF 22683A

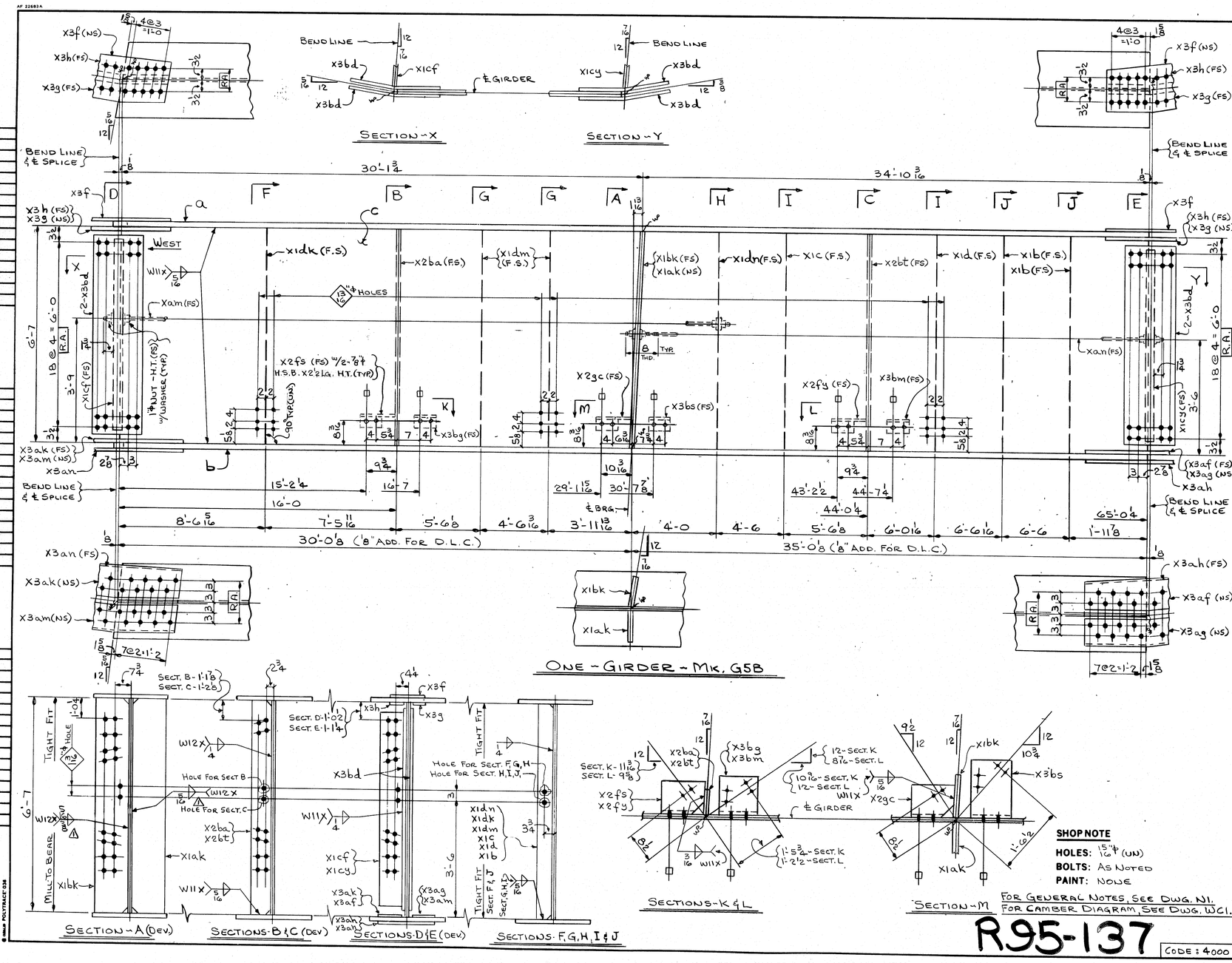

FED. ROAD DIV. NO.	STATE	FED. AID PROJ. NO.
1	ME	I-IG-395-8(82)176

BILL OF MATERIAL

NO.	MARK	DESCRIPTION	LENGTH		REMARKS	ITEM	SHIP. WEIGHT
ONE	G5B	GIRDER					32,735
ONE	a	PL. 27 x 1 5/8	65	0 5/16			
ONE	b	PL. 27 x 1 5/8	65	0 5/8			
ONE	c	PL. 79 x 9/16	65	0 4			
ONE	Xam	1"ϕ ROD	34	4 4	THD. BOTH ENDS	6/3	
ONE	Xan	1"ϕ ROD	35	3 8	THD. BOTH ENDS	6/3	
2	x1b	BAR 5 x 7/16	6	7			
ONE	x1c	BAR 6 x 7/16					
ONE	x1d	BAR 5 x 7/16					
ONE	x1dk	BAR 5 x 7/16					
2	x1dm	BAR 6 x 7/16					
ONE	x1dn	BAR 6 x 9/16					
ONE	x1bk	PL. 12 x 1 3/8					
ONE	x1ak	PL. 12 x 1 3/8					
ONE	x2ba	BAR 7 x 7/16					
ONE	x2bt	BAR 7 x 7/16	6	7			
ONE	x1cf	BAR 8 x 1/2	6	1			
ONE	x1cy	BAR 8 x 1/2	6	1			
2	x3f	PL. 11 3/8 x 1/2	2	6 1/2			
2	x3g	BAR 4 3/8 x 3/4	2	6 1/2			
2	x3h	BAR 4 3/8 x 3/4	2	6 1/2			
ONE	x3af	PL. 8 1/2 x 1"	2	10 1/2			
ONE	x3ag	PL. 8 1/2 x 1"	2	10 1/2			
ONE	x3ah	PL. 17 1/2 x 7/8	2	10 1/2			
ONE	x3ak	PL. 8 3/8 x 1"	2	10 1/2			
ONE	x3am	PL. 8 3/8 x 1"	2	10 1/2			
ONE	x3an	PL. 17 3/8 x 7/8	2	10 1/2			
4	x3bd	BENT PL. 75 x 1/2	1	3			
ONE	x2fy	PL. MC 18 x 45.8	0	11 13/16			
ONE	x2gc		0	11 13/16			
ONE	x2fs		0	11 13/16			
ONE	x3bg		0	10 1/2			
ONE	x3bs		0	10 1/2			
ONE	x3bm	PL. MC 18 x 45.8	0	10 1/2			
12		7/8"ϕ H.S. BOLTS	0	2 1/2		BI/4	
12		WASH. FOR 7/8"ϕ H.S. BOLTS				BI/9	
8		1"ϕ STD. HEX. NUTS				BI/12	
8		WASH. FOR 1"ϕ ROD				BI/8	

NO.	REVISION	DATE
1	CHANGED WELD SIZES	1-3-85

HIGH STEEL STRUCTURES, INC.
1905 Old Philadelphia Pike
Lancaster, Pennsylvania 17603
Phone 717/299-5211
A Subsidiary of High Industries, Inc

GIRDER G5B
I-395 BRIDGE OVER PENOBSCOT RIVER
I-395 BRIDGE STA. 164+60.00
PENOBSCOT COUNTY
STATE OF MAINE
DEPARTMENT OF TRANSPORTATION

STATE CONTRACT OR REF. NO. 6 CONTRACTOR GANBRO CORP.
IN CHARGE: HINKLE MADE BY: G.F.Z. CHK.D BY: CS DATE: 6-28-84
CONTRACT NUMBER: ME-84088-1 DRAWING NUMBER: 21 OF 36

SHOP NOTE
HOLES: 15/16"ϕ (UN)
BOLTS: AS NOTED
PAINT: NONE

FOR GENERAL NOTES, SEE DWG. N1.
FOR CAMBER DIAGRAM, SEE DWG. W61.

R95-137

CODE: 4000

© 1984 POLYTRACE 028

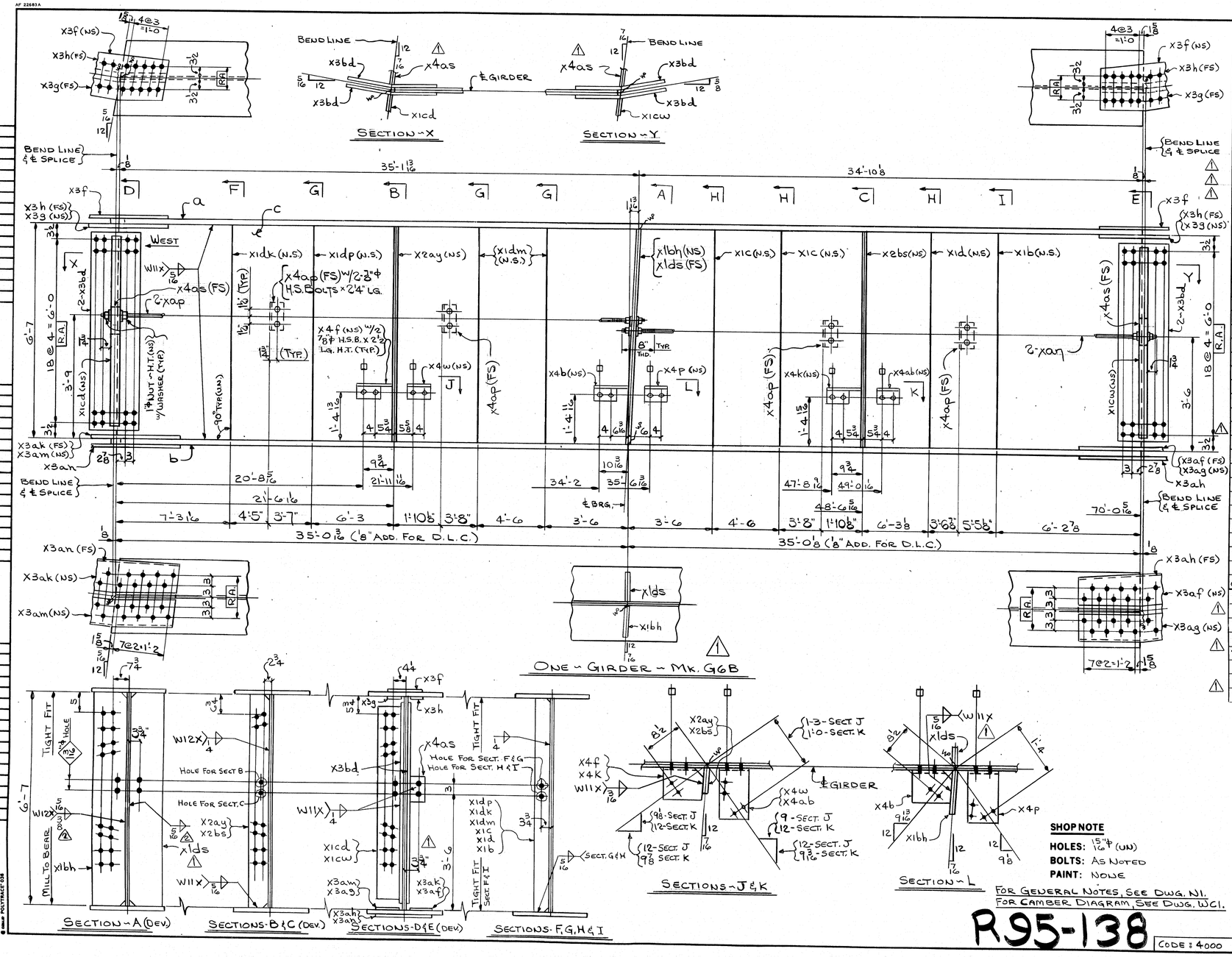

FED. ROAD DIV. NO.	STATE	FED. AID PROJ. NO.
1	ME	I-IG-395-8(82)176

BILL OF MATERIAL

NO.	MARK	DESCRIPTION	LENGTH		REMARKS	ITEM	SHIP. WEIGHT
ONE	G6B	GIRDER					36,790
ONE	a	PL. 27 x 1 3/4	70	0 5/16			
ONE	b	PL. 27 x 1 3/4	70	0 11/16			
ONE	c	PL. 79 x 9/16	70	0 5/16			
2	X2ap	1 1/4" ROD	35	5 8	THD. BOTH ENDS	6/3	
2	X2an	1 1/4" ROD	35	3 8	THD. BOTH ENDS	6/3	
2	X4as	BAR 4 1/2 x 1/2	0	6			
ONE	X1b	BAR 5 x 7/16	6	7			
2	X1c	BAR 6 x 9/16	↕	↕			
ONE	X1d	BAR 5 x 7/16					
ONE	X1dk	BAR 5 x 7/16					
2	X1dm	BAR 6 x 9/16					
ONE	X1dp	BAR 5 x 7/16	6	7			
2	X3f	PL. 11 3/8 x 1/2	2	6 1/2			
2	X3g	BAR 4 3/8 x 3/4	2	6 1/2			
2	X3h	BAR 4 3/8 x 3/4	2	6 1/2			
4	X3bd	BENT PL. 7 5 x 1/2	1	3			
ONE	X3ak	PL. 8 3/8 x 1"	2	10 1/2			
	X3am	PL. 8 3/8 x 1"	2	10 1/2			
	X3an	PL. 17 3/8 x 7/8	2	10 1/2			
	X3af	PL. 8 1/2 x 1"	2	10 1/2			
	X3ag	PL. 8 1/2 x 1"	2	10 1/2			
	X3ah	PL. 17 1/2 x 7/8	2	10 1/2			
	X1ds	PL. 12 x 1 3/8	6	7			
	X1bh	PL. 12 x 1 3/8	↕	↕			
	X2ay	BAR 7 x 7/16					
	X2bs	BAR 7 x 7/16	6	7			
	X1cd	BAR 8 x 1/2	6	1			
	X1cw	BAR 8 x 1/2	6	1			
	X4b	PL. MC 18 x 45.8	0	11 3/8			
	X4f		0	11 3/8			
	X4k		0	11 3/8			
	X4p		0	10			
	X4w		0	8 1/4			
ONE	X4ab	PL. MC 18 x 45.8	0	8 1/2			
4	X4ap	L 5 x 3 x 1/4	0	6			
8		3/4" H.S. BOLT	0	2 1/4		B1/5	
12		3/4" H.S. BOLT	0	2 1/8		B1/4	
20		WASHERS FOR 3/4" H.S. BOLTS				B1/9	
16		1 1/4" STD. HEX. NUTS				B1/12	
16		WASHERS FOR 1 1/4" RODS				B1/8	

NO.	REVISION	DATE
2	CHANGED WELD SIZES	1-3-85
1	contract revision control # 14	9-10-84

HIGH STEEL STRUCTURES, INC.
1905 Old Philadelphia Pike
Lancaster, Pennsylvania 17603
Phone 717/299-5211
A Subsidiary of High Industries, Inc

GIRDER G6B
I-395 BRIDGE OVER PENOBSCOT RIVER
I-395 BRIDGE STA. 164+60.00
PENOBSCOT COUNTY
STATE OF MAINE
DEPARTMENT OF TRANSPORTATION

STATE CONTRACT OR REF. NO. 6 CONTRACTOR GANBRO CORP.
IN CHARGE: HINKLE MADE BY: G.F.X. CHK.D. BY: CS DATE 6-29-84
CONTRACT NUMBER: ME-84088-1 DRAWING NUMBER: 22 OF 36

FED. ROAD DIV. NO.	STATE	FED. AID PROJ. NO.
1	ME	I-IG-395-8(82)176

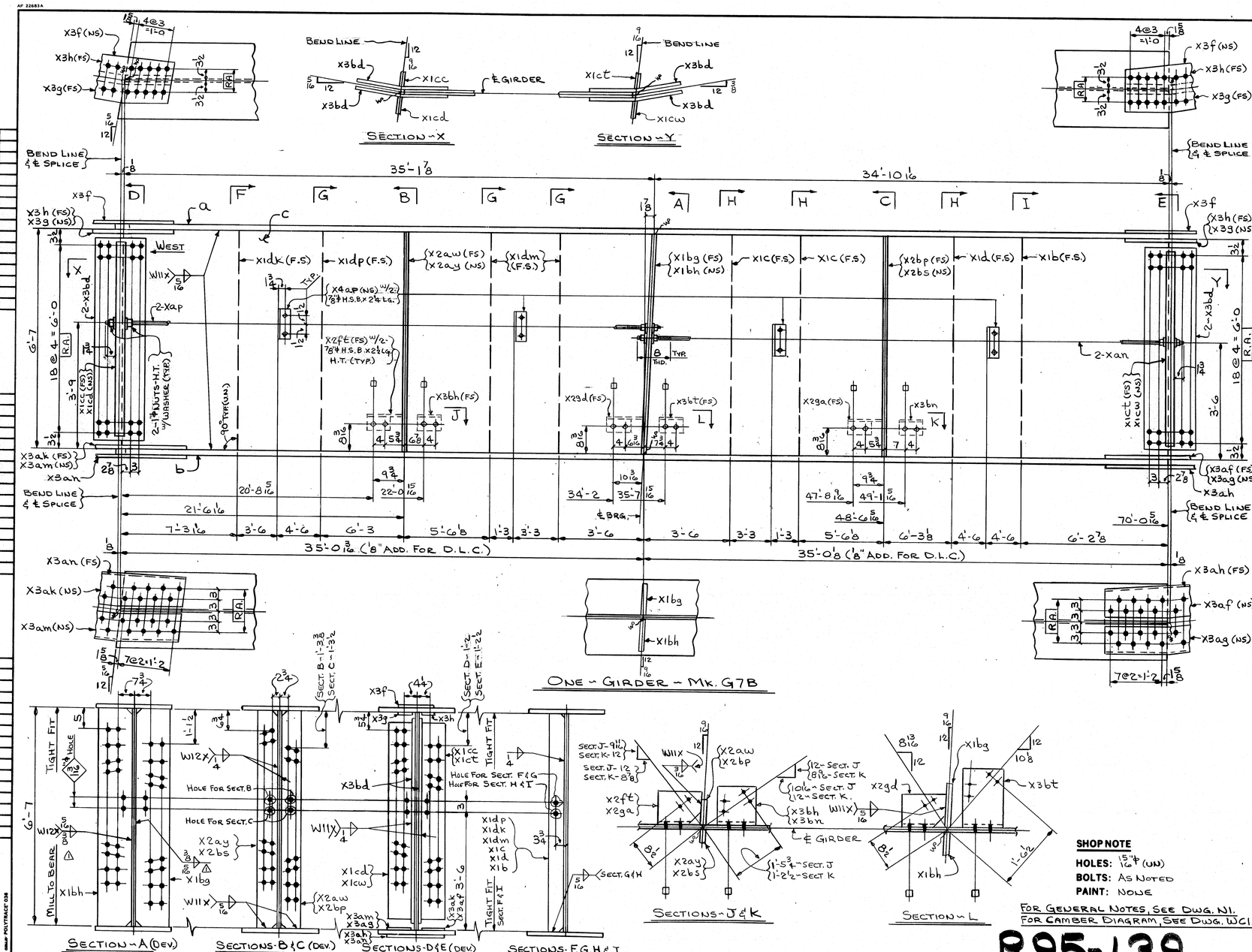

BILL OF MATERIAL

NO.	MARK	DESCRIPTION	LENGTH		REMARKS	ITEM	SHIP. WEIGHT
ONE	G7B	GIRDER					37,110.
ONE	a	PL. 27 x 1 3/4	70	0 5/16			
ONE	b	PL. 27 x 1 3/4	70	0 11/16			
ONE	c	PL. 79 x 9/16	70	0 5/16			
2	Xap	1" ϕ ROD	35	5 1/8	THD. BOTH ENDS	6/5	
2	Xan	1" ϕ ROD	35	3 1/8	THD. BOTH ENDS	6/3	
4	X4ap	L5x3x4	0	6			
ONE	X1b	BAR 5 x 7/16	6	7			
2	X1c	BAR 6 x 9/16					
ONE	X1d	BAR 5 x 7/16					
ONE	X1dk	BAR 5 x 7/16					
2	X1dm	BAR 6 x 9/16					
ONE	X1dp	BAR 5 x 7/16	6	7			
2	X3f	PL. 11 3/8 x 1/2	2	6 1/2			
2	X3g	BAR 4 3/8 x 3/4	2	6 1/2			
2	X3h	BAR 4 3/8 x 3/4	2	6 1/2			
4	X3bd	BENT PL. 7 5 x 1/2	1	3			
ONE	X3ak	PL. 8 3/8 x 1"	2	10 1/2			
	X3am	PL. 8 3/8 x 1"	2	10 1/2			
	X3an	PL. 17 3/8 x 7/8	2	10 1/2			
	X3af	PL. 8 1/2 x 1"	2	10 1/2			
	X3ag	PL. 8 1/2 x 1"	2	10 1/2			
	X3ah	PL. 17 1/2 x 7/8	2	10 1/2			
	X1bg	PL. 12 x 1 3/8	6	7			
	X1bh	PL. 12 x 1 3/8					
	X2ay	BAR 7 x 7/16					
	X2aw						
	X2bp						
	X2bs	BAR 7 x 7/16	6	7			
	X1cc	BAR 8 x 1/2	6	1			
	X1cd						
	X1ct						
ONE	X1cw	BAR 8 x 1/2	6	1			
16		1" ϕ STD. HEX. NUTS				B1/16	
16		WASH. FOR 1" ϕ ROD				B1/8	
20		WASH. FOR 7/8" ϕ H.S. BOLT				B1/4	
8		7/8" ϕ H.S. BOLTS	0	2 1/4		B1/3	
12		7/8" ϕ H.S. BOLTS	0	2 1/2		B1/4	
ONE	X2ft	PL. MC18 x 45.8	0	11 15/16			
	X2ga		0	11 15/16			
	X2gd		0	11 15/16			
	X3bh		0	10 1/4			
	X3bn		0	10 1/2			
ONE	X3bt	PL. MC18 x 45.8	0	10 1/2			

NO.	REVISION	DATE
1	CHANGED WELD SIZES	1-3-85

SHOP NOTE

HOLES: 15/16" ϕ (UN)
BOLTS: AS NOTED
PAINT: NONE

FOR GENERAL NOTES, SEE DWG. N1.
FOR CAMBER DIAGRAM, SEE DWG. W1.

R95-139

CODE: 4000

HIGH STEEL STRUCTURES, INC.
1905 Old Philadelphia Pike
Lancaster, Pennsylvania 17603
Phone 717/299-5211
A Subsidiary of High Industries, Inc

GIRDER G7B
I-395 BRIDGE OVER PENOBSCOT RIVER
I-395 BRIDGE STA. 164+60.00
PENOBSCOT COUNTY
STATE OF MAINE
DEPARTMENT OF TRANSPORTATION

STATE CONTRACT OR REF. NO. 6 CONTRACTOR GAUBRO CORP.
IN CHARGE: HINKLE MADE BY: G.F.Z. CHK.D. BY: CS DATE: 6-29-84
CONTRACT NUMBER: ME-84088-1 DRAWING NUMBER: 23 OF 36

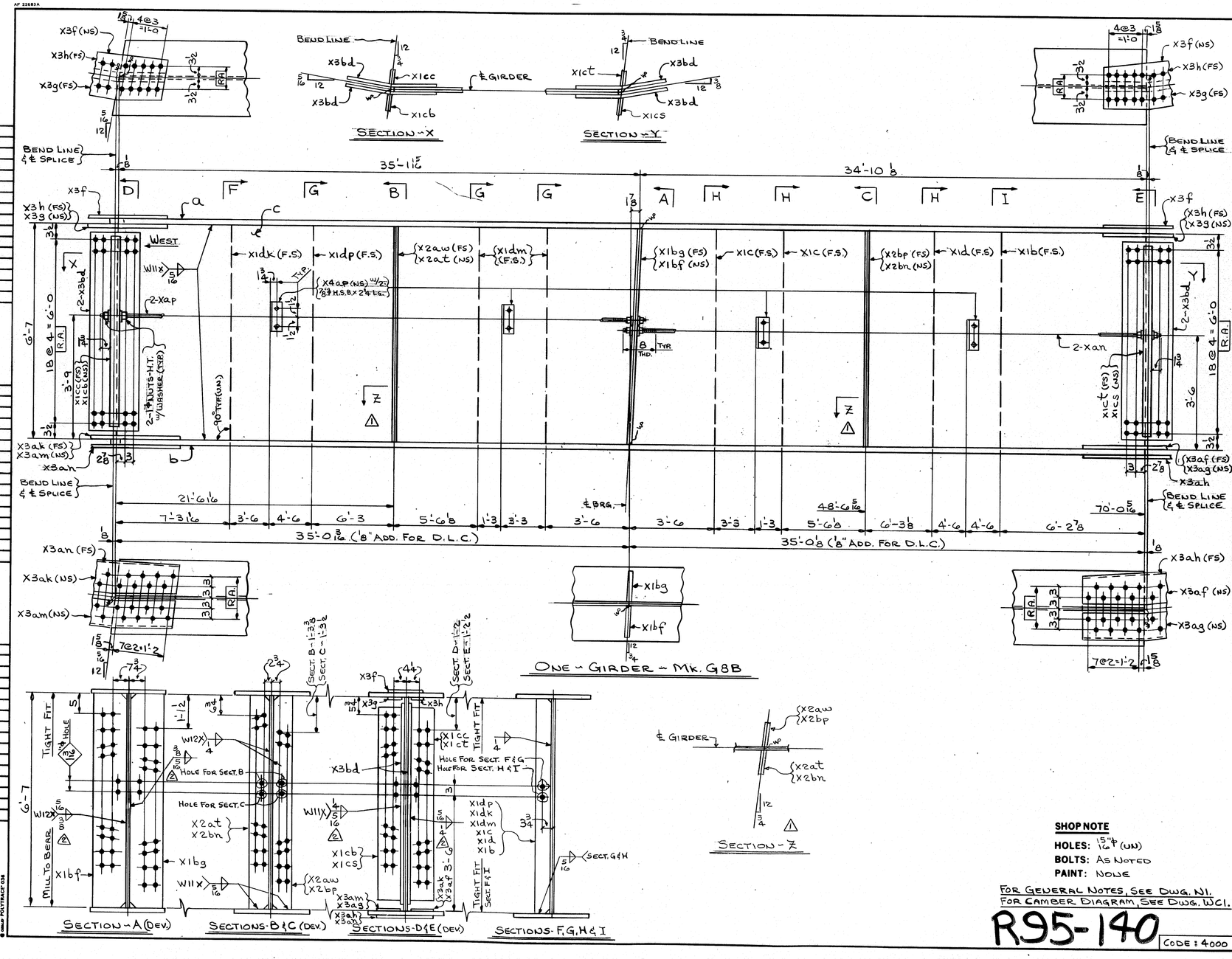

FED. ROAD DIV. NO.	STATE	FED. AID PROJ. NO.
1	ME	I-IG-395-8(82)176

BILL OF MATERIAL

NO.	MARK	DESCRIPTION	LENGTH		REMARKS	ITEM	SHIP. WEIGHT
ONE	G8B	GIRDER					36,845
ONE	a	PL. 27 x 1 3/4	70	0 7/16			
ONE	b	PL. 27 x 1 3/4	70	0 11/16			
ONE	c	PL. 79 x 9/16	70	0 5/16			
2	Xap	1"ϕ ROD	35	5 1/8	THD. BOTH ENDS	6/3	
2	Xan	1"ϕ ROD	35	3 1/8	THD. BOTH ENDS	6/3	
4	X4ap	L 5 x 3 x 4	0	6			
ONE	X1b	BAR 5 x 7/16	6	7			
2	X1c	BAR 6 x 9/16					
ONE	X1d	BAR 5 x 7/16					
ONE	X1dk	BAR 5 x 7/16					
2	X1dm	BAR 6 x 9/16					
ONE	X1dp	BAR 5 x 7/16	6	7			
2	X3f	PL. 11 3/8 x 1/2	2	6 1/2			
2	X3g	BAR 4 3/8 x 3/4	2	6 1/2			
2	X3h	BAR 4 3/8 x 3/4	2	6 1/2			
4	X3bd	BENT PL. 7.5 x 1/2	1	3			
ONE	X3ak	PL. 8 3/8 x 1"	2	10 1/2			
	X3aw	PL. 8 3/8 x 1"	2	10 1/2			
	X3an	PL. 17 3/8 x 7/8	2	10 1/2			
	X3af	PL. 8 1/2 x 1"	2	10 1/2			
	X3ag	PL. 8 1/2 x 1"	2	10 1/2			
	X3ah	PL. 17 1/2 x 7/8	2	10 1/2			
	X1bg	PL. 12 x 1 3/8	6	7			
	X1bf	PL. 12 x 1 3/8					
	X2aw	BAR 7 x 7/16					
	X2at						
	X2bp						
	X2bn	BAR 7 x 7/16	6	7			
	X1cb	BAR 8 x 1/2	6	1			
	X1cc						
	X1cs						
ONE	X1ct	BAR 8 x 1/2	6	1			
16		1"ϕ STD. HEX. NUTS				B1/12	
16		WASH. FOR 1"ϕ ROD				B1/8	
8		WASH. FOR 7/8"ϕ H.S. BOLT				B1/9	
8		7/8"ϕ H.S. BOLTS	0	2 1/4		B1/3	

NO.	REVISION	DATE
2	REVISION CHANGED WELD SIZES	1-3-85
1	REVISION ADDED SECT. Z	12-21-84

HIGH STEEL STRUCTURES, INC.
1905 Old Philadelphia Pike
Lancaster, Pennsylvania 17603
Phone 717/299-5211
A Subsidiary of High Industries, Inc

GIRDER G8B
I-395 BRIDGE OVER PENOBSCOT RIVER
I-395 BRIDGE STA. 164+60.00
PENOBSCOT COUNTY
STATE OF MAINE
DEPARTMENT OF TRANSPORTATION

STATE CONTRACT OR REF. NO. 6 CONTRACTOR GALBRO CORP.
IN CHARGE: HINKLE MADE BY: G.F.Z. CHK.D. BY: CS DATE: 6-29-84
CONTRACT NUMBER: ME-84088-1 DRAWING NUMBER: 24 OF 36

SHOP NOTE
HOLES: 15/16"ϕ (UN)
BOLTS: AS NOTED
PAINT: NONE

FOR GENERAL NOTES, SEE DWG. N1.
FOR CAMBER DIAGRAM, SEE DWG. WC1.

R95-140

CODE: 4000

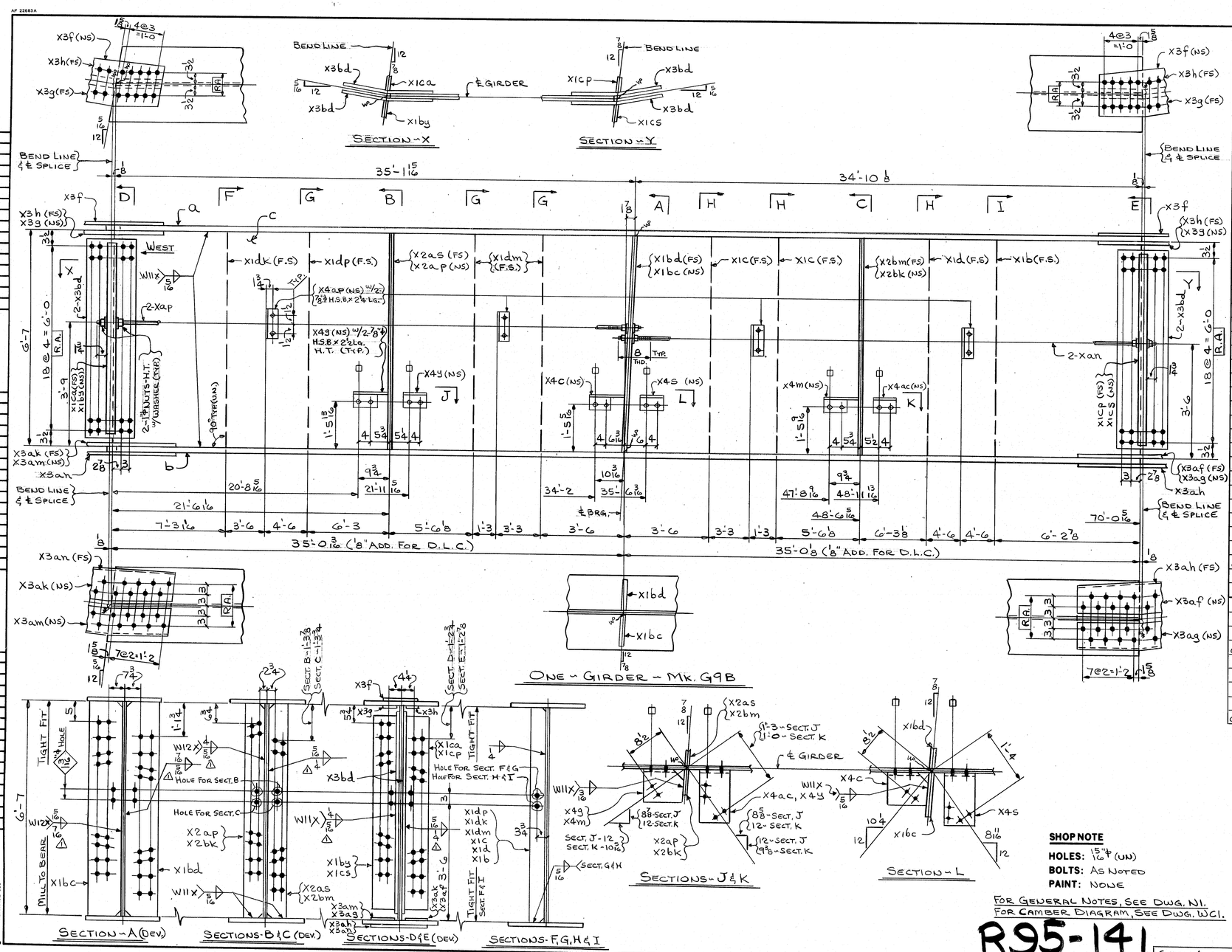

FED. ROAD DIV. NO.	STATE	FED. AID PROJ. NO.
1	ME	I IG-395-8(82)176

BILL OF MATERIAL

NO.	MARK	DESCRIPTION	LENGTH		REMARKS	ITEM	S.HIP WEIGHT
ONE	G9B	GIRDER					37,085
ONE	a	PL. 27 x 1 3/4	70	0 7/16			
ONE	b	PL. 27 x 1 3/4	70	0 11/16			
ONE	c	PL. 79 x 9/16	70	0 5/16			
2	Xap	1"ϕ ROD	35	5 1/8	THD. BOTH ENDS	6/3	
2	Xan	1"ϕ ROD	35	3 1/8	THD. BOTH ENDS	6/3	
4	X4ap	L 5 x 3 x 4	0	6			
ONE	X1b	BAR 5 x 7/16	6	7			
2	X1c	BAR 6 x 9/16	↑	↑			
ONE	X1d	BAR 5 x 7/16					
ONE	X1dk	BAR 5 x 7/16					
2	X1dm	BAR 6 x 9/16					
ONE	X1dp	BAR 5 x 7/16	6	7			
2	X3f	PL. 11 3/8 x 1/2	2	6 1/2			
2	X3g	BAR 4 3/8 x 3/4	2	6 1/2			
2	X3h	BAR 4 3/8 x 3/4	2	6 1/2			
4	X3bd	BENT PL. 7 5 x 1/2	1	3			
ONE	X3ak	PL. 8 3/8 x 1"	2	10 1/2			
	X3am	PL. 8 3/8 x 1"	2	10 1/2			
	X3an	PL. 17 3/8 x 7/8	2	10 1/2			
	X3af	PL. 8 1/2 x 1"	2	10 1/2			
	X3ag	PL. 8 1/2 x 1"	2	10 1/2			
	X3ah	PL. 17 1/2 x 7/8	2	10 1/2			
	X1bc	PL. 12 x 1 3/8	6	7			
	X1bd	PL. 12 x 1 3/8	↕	↕			
	X2ap	BAR 7 x 7/16					
	X2as						
	X2bk						
	X2bm	BAR 7 x 7/16	6	7			
	X1by	BAR 8 x 1/2	6	1			
	X1ca						
	X1cp						
ONE	X1cs	BAR 8 x 1/2	6	1			
16		1"ϕ STD. HEX. NUTS				B1/12	
16		WASH. FOR 1"ϕ ROD				B1/8	
20		WASH. FOR 7/8"ϕ H.S. BOLT				B1/9	
8		7/8"ϕ H.S. BOLTS	0	2 1/4		B1/3	
12		7/8"ϕ H.S. BOLTS	0	2 1/2		B1/4	
ONE	X4c	PL. MC18 x 45.8	0	11 1/4			
	X4g		0	11 1/4			
	X4m		0	11 1/4			
	X4s		0	10			
	X4y		0	8 1/4			
ONE	X4ac	PL. MC18 x 45.8	0	8 1/2			

NO.	REVISION	DATE
△	CHANGED WELD SIZES	1-3-85

HIGH STEEL STRUCTURES, INC.
1905 Old Philadelphia Pike
Lancaster, Pennsylvania 17603
Phone 717/299-5211
A Subsidiary of High Industries, Inc.

GIRDER G9B
I-395 BRIDGE OVER PENOBSCOT RIVER
I-395 BRIDGE STA. 164+60.00
PENOBSCOT COUNTY
STATE OF MAINE
DEPARTMENT OF TRANSPORTATION

STATE CONTRACT OR REF. NO. 6 CONTRACTOR GANBRO CORP.
IN CHARGE: HINKLE MADE BY: G.F.Z. CHK.D. BY: CS DATE: 6-29-84
CONTRACT NUMBER: ME-84088-1 DRAWING NUMBER: 25 OF 36

SHOP NOTE
HOLES: 15/16"ϕ (UN)
BOLTS: AS NOTED
PAINT: NONE

FOR GENERAL NOTES, SEE DWG. N1.
FOR CAMBER DIAGRAM, SEE DWG. WC1.

R95-141

CODE # 4000

AF 22683A

© 1984 POLYTRACE 0258

FED. ROAD DIV. NO.	STATE	FED. AID PROJ. NO.
1	ME	I-IG-395-8(82)176

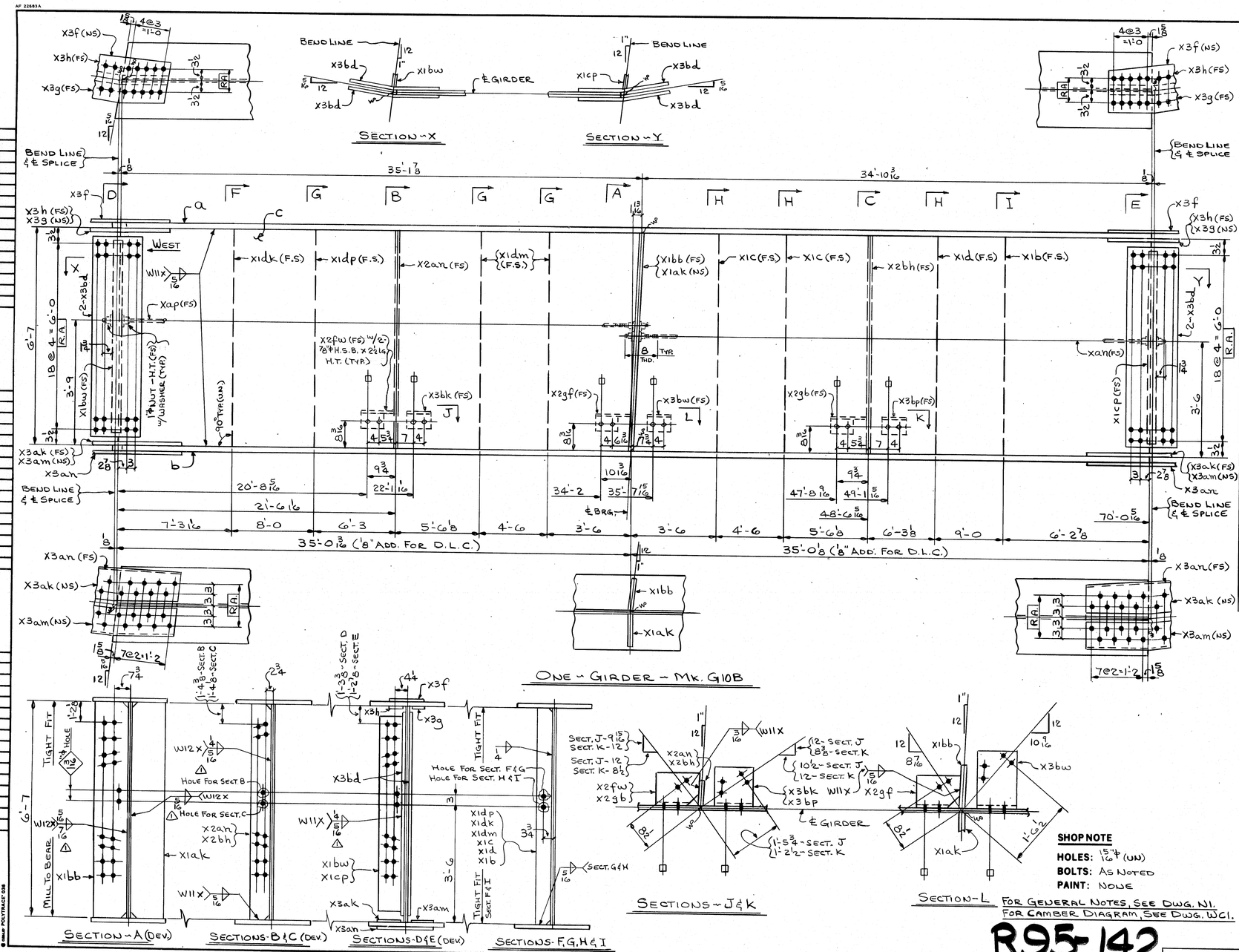

BILL OF MATERIAL

NO.	MARK	DESCRIPTION	LENGTH		REMARKS	ITEM	SHIP. WEIGHT
ONE	G10B	GIRDER					36,600
ONE	a	PL. 27 x 1 3/4	70	0 7/16			
ONE	b	PL. 27 x 1 3/4	70	0 7/16			
ONE	c	PL. 79 x 9/16	70	0 5/16			
ONE	Xap	1" ϕ ROD	35	5 1/8	THD. BOTH ENDS	6/3	
ONE	Xan	1" ϕ ROD	35	3 1/8	THD. BOTH ENDS	6/3	
ONE	X1b	BAR 5 x 7/16	6	7			
2	X1c	BAR 6 x 9/16					
ONE	X1d	BAR 5 x 7/16					
ONE	X1dk	BAR 5 x 7/16					
2	X1dm	BAR 6 x 9/16					
ONE	X1dp	BAR 5 x 7/16	6	7			
2	X3f	PL. 11 3/8 x 1/2	2	6 1/2			
2	X3g	BAR 4 3/8 x 3/4	2	6 1/2			
2	X3h	BAR 4 3/8 x 3/4	2	6 1/2			
4	X3bd	BENT PL. 7.5 x 1/2	1	3			
2	X3ak	PL. 8 3/8 x 1"	2	10 1/2			
2	X3am	PL. 8 3/8 x 1"	2	10 1/2			
2	X3an	PL. 17 3/8 x 7/8	2	10 1/2			
ONE	X1bb	PL. 12 x 1 3/8	6	7			
	X1ak	PL. 12 x 1 3/8					
	X2an	BAR 7 x 7/16					
	X2bh	BAR 7 x 7/16	6	7			
	X1bw	BAR 8 x 1"	6	1			
	X1cp	BAR 8 x 1"	6	1			
	X2fw	PL. MC18 x 45.8	1	0 1/4			
	X2gb		1	0 1/4			
	X2gf		1	0 1/4			
	X3bk		0	10 1/2			
	X3bp		0	10 1/2			
ONE	X3bw	PL. MC18 x 45.8	0	10 1/2			
8		1" ϕ STD. HEX. NUTS				B1/12	
8		WASH. FOR 1" ϕ ROD				B1/8	
12		7/8" ϕ H.S. BOLTS	0	2 1/2		B1/4	
12		WASH. FOR 7/8" ϕ H.S. BOLTS				B1/9	

SHOP NOTE

HOLES: 15/16" ϕ (UN)
BOLTS: AS NOTED
PAINT: NONE

FOR GENERAL NOTES, SEE DWG. N1.
FOR CAMBER DIAGRAM, SEE DWG. W1.

R95-142

CODE: 4000

NO.	REVISION	DATE
1	CHANGED WELD SIZES	1-3-85

HIGH STEEL STRUCTURES, INC.
1905 Old Philadelphia Pike
Lancaster, Pennsylvania 17603
Phone 717/299-5211
A Subsidiary of High Industries, Inc

GIRDER G10B
I-395 BRIDGE OVER PENOBSCOT RIVER
I-395 BRIDGE STA. 164+60.00
PENOBSCOT COUNTY
STATE OF MAINE
DEPARTMENT OF TRANSPORTATION

STATE CONTRACT OR REF. NO. 6 CONTRACTOR GALBRO CORP.
IN CHARGE: HINKLE MADE BY: G.F.Z. CHK.D. BY: CS DATE: 6-29-84
CONTRACT NUMBER ME-84088-1 DRAWING NUMBER 26 OF 36

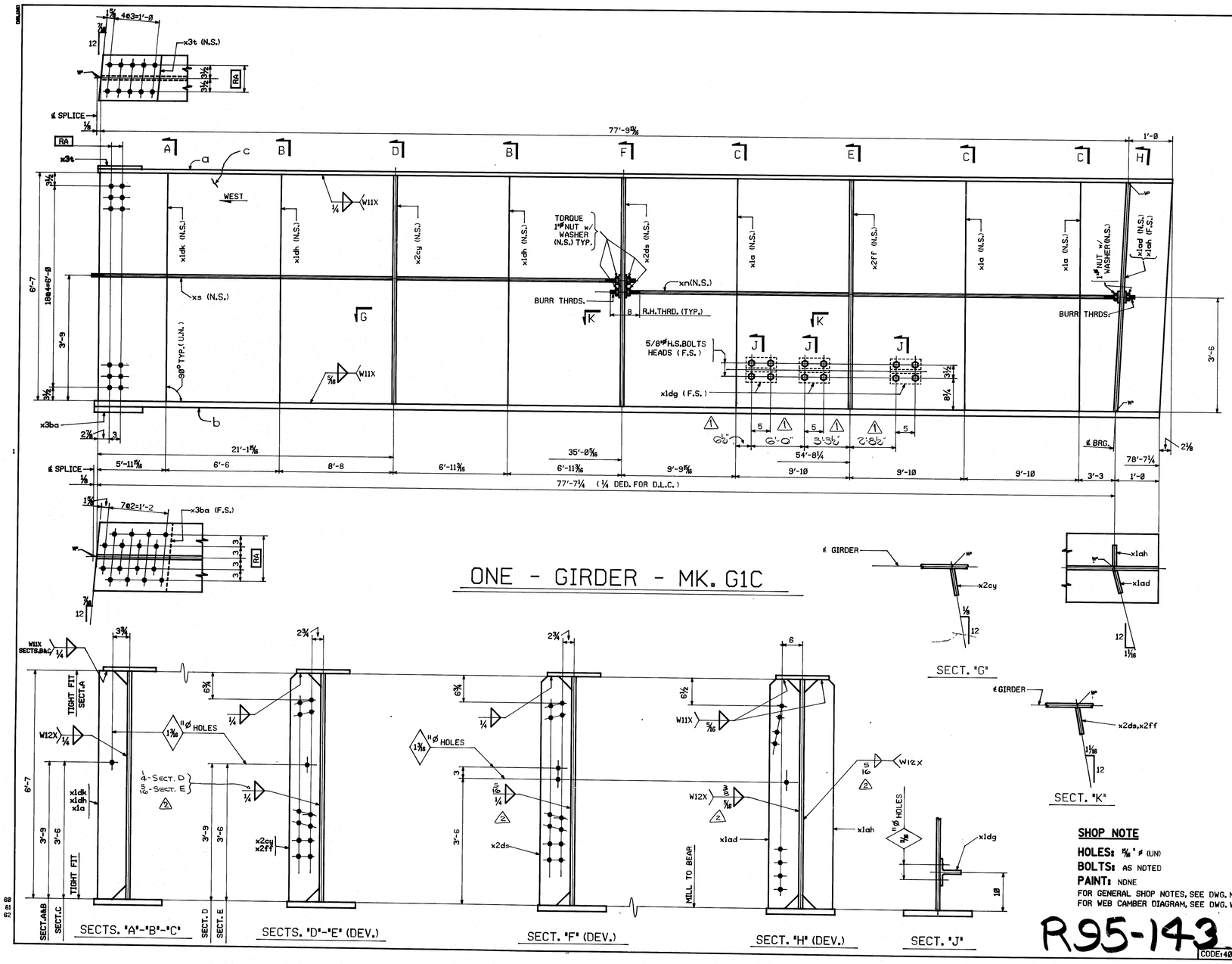

ONE - GIRDER - MK. G1C

FED.ROAD DIV.NO.	STATE	FED.AID PROJ.NO.
1	ME.	I-IG-395-8(82)176

BILL OF MATERIAL

NO.	MARK	DESCRIPTION	LENGTH		REMARKS	ITEM	SHIP WEIGHT EA.
		ONE-GIRDER MK. GIC					20,800
ONE	a	PL.12 x 3/4	78	10 1/16			
ONE	b	PL.18 x 1 3/8	78	7 3/16			
ONE	c	PL.79 x 1/2	78	9 9/16			
ONE	xn	1"ø ROD	43	0	THRD. BOTH ENDS	6/12	
ONE	xs	1"ø ROD	35	4	THRD. BOTH ENDS	6/2	
ONE	x3t	PL.11 1/2 x 7/8	1	3 1/8			
ONE	x3ba	PL.17 5/8 x 1/4	1	5 1/8			
3	x1a	BAR 5 x 7/16	6	7			
ONE	x1ad	BAR 8 x 1	6	7			
ONE	x1ah	BAR 8 x 1	6	7			
2	x1dh	BAR 5 x 7/16	6	7			
ONE	x1dk	BAR 5 x 7/16	6	7			
ONE	x2cy	BAR 7 x 7/16	6	7			
ONE	x2ds	BAR 7 x 7/16	6	7			
ONE	x2ff	BAR 7 x 7/16	6	7			
3	x1dg	WT 6 x 13	0	8			
6		1"ø STD.HEX.NUTS				B1/12	
6		WASHERS FOR 1"ø RODS				B1/8	
12		5/8"ø H.S.BOLT	0	2		B1/6	
12		WASHERS FOR 5/8"ø H.S.BOLTS				B1/10	

NO.	REVISION	DATE
2	CHANGED WELD SIZES	1-3-85
1	contract revision control #14	9-10-84

HIGH STEEL STRUCTURES, INC.
1905 Old Philadelphia Pike Lancaster, Pennsylvania 17603 Phone 717/299-523
A Subsidiary of High Industries, Inc.

GIRDER G1C
I-395 BRIDGE OVER PENOBSCOT RIVER
I-395 BRIDGE STA. 164+60.00
PENOBSCOT COUNTY
STATE OF MAINE
DEPARTMENT OF TRANSPORTATION

STATE CONTRACT OR REF.NO. 6 CONTRACTOR CIANBRO CORP.
IN CHARGE: HINKLE MADE BY: C.S. CHK.D. BY: G.F.Z. DATE: 7/6/84
CONTRACT NUMBER: ME-84088-1 DRAWING NUMBER: 27 OF 36

SHOP NOTE

HOLES: 5/8" ø (UN)
BOLTS: AS NOTED
PAINT: NONE
FOR GENERAL SHOP NOTES, SEE DWG. N1.
FOR WEB CAMBER DIAGRAM, SEE DWG. WC1.

R95-143

CODE: 4000

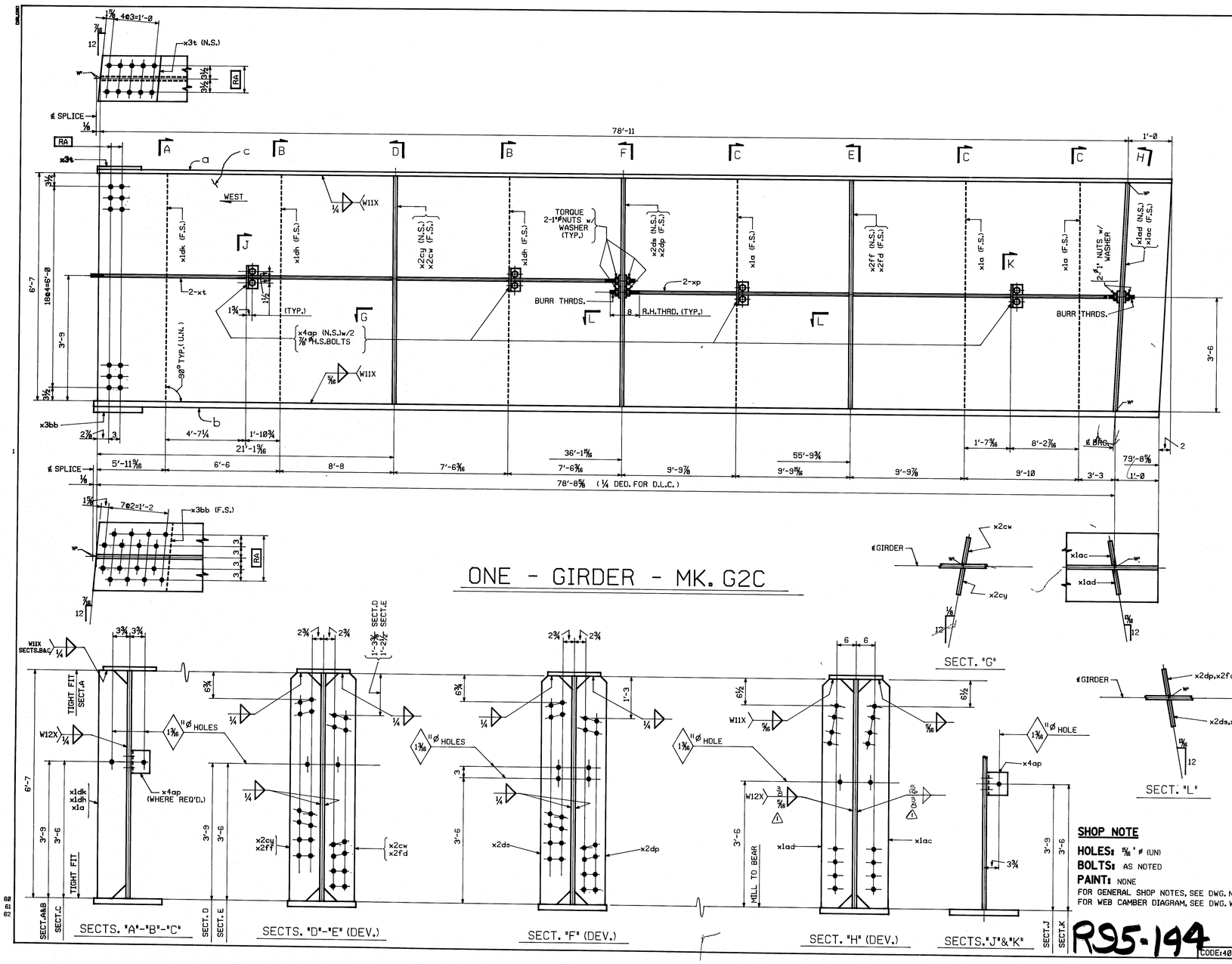

FED.ROAD DIV.NO.	STATE	FED.AID PROJ.NO.
1	ME.	I-IG-395-8(821)176

BILL OF MATERIAL

NO.	MARK	DESCRIPTION	LENGTH		REMARKS	ITEM	SUP. WEIGHT EA.
		ONE-GIRDER MK. G2C					21490
ONE	a	PL.12 x 3/4	79	11 1/4			
ONE	b	PL.18 x 1 3/8	79	8 5/16			
ONE	c	PL.79 x 1/2	79	11			
2	xp	1"ø ROD	42	11 5/8	THRD. BOTH ENDS	6/12	
2	xt	1"ø ROD	36	5 3/4	THRD. BOTH ENDS	6/4	
ONE	x3t	PL.11 1/2x 7/8	1	3 1/8			
ONE	x3bb	PL.17 1/2x 1/4	1	5 1/8			
3	x1a	BAR 5 x 7/16	6	7			
ONE	x1ac	BAR 8 x 1	6	7			
ONE	x1ad	BAR 8 x 1	6	7			
2	x1dh	BAR 5 x 7/16	6	7			
ONE	x1dk	BAR 5 x 7/16	6	7			
ONE	x2cw	BAR 7 x 7/16	6	7			
ONE	x2cy	BAR 7 x 7/16	6	7			
ONE	x2dp	BAR 7 x 7/16	6	7			
ONE	x2ds	BAR 7 x 7/16	6	7			
ONE	x2fd	BAR 7 x 7/16	6	7			
ONE	x2ff	BAR 7 x 7/16	6	7			
4	x4ap	L 5 x 3 x 1/4	0	6			
12		1"ø STD.HEX.NUTS				81/12	
12		WASHERS FOR 1"ø RODS				81/8	
8		7/8"ø H.S.BOLTS	0	2		81/2	
8		WASHERS FOR 7/8"ø H.S.BOLTS				81/9	

NO.	REVISION	DATE
1	CHANGED WELD SIZES	1-3-85

HIGH STEEL STRUCTURES, INC.
1905 Old Philadelphia Pike
Lancaster, Pennsylvania 17603
Phone 717/299-523
A Subsidiary of High Industries, Inc.

GIRDER G2C
I-395 BRIDGE OVER PENOBSCOT RIVER
I-395 BRIDGE STA. 164+60.00
PENOBSCOT COUNTY
STATE OF MAINE
DEPARTMENT OF TRANSPORTATION

STATE CONTRACT OR REF.NO. 6 CONTRACTOR CIANBRO CORP.
IN CHARGE: HINKLE MADE BY: C.S. CHK.D. BY: G.F.Z. DATE: 7/6/84
CONTRACT NUMBER: ME-84088-1 DRAWING NUMBER: 28 OF 36

SHOP NOTE

HOLES: 15/16" ø (UN)
BOLTS: AS NOTED
PAINT: NONE
FOR GENERAL SHOP NOTES, SEE DWG. N1.
FOR WEB CAMBER DIAGRAM, SEE DWG. W1.

R95-194

CODE: 4000

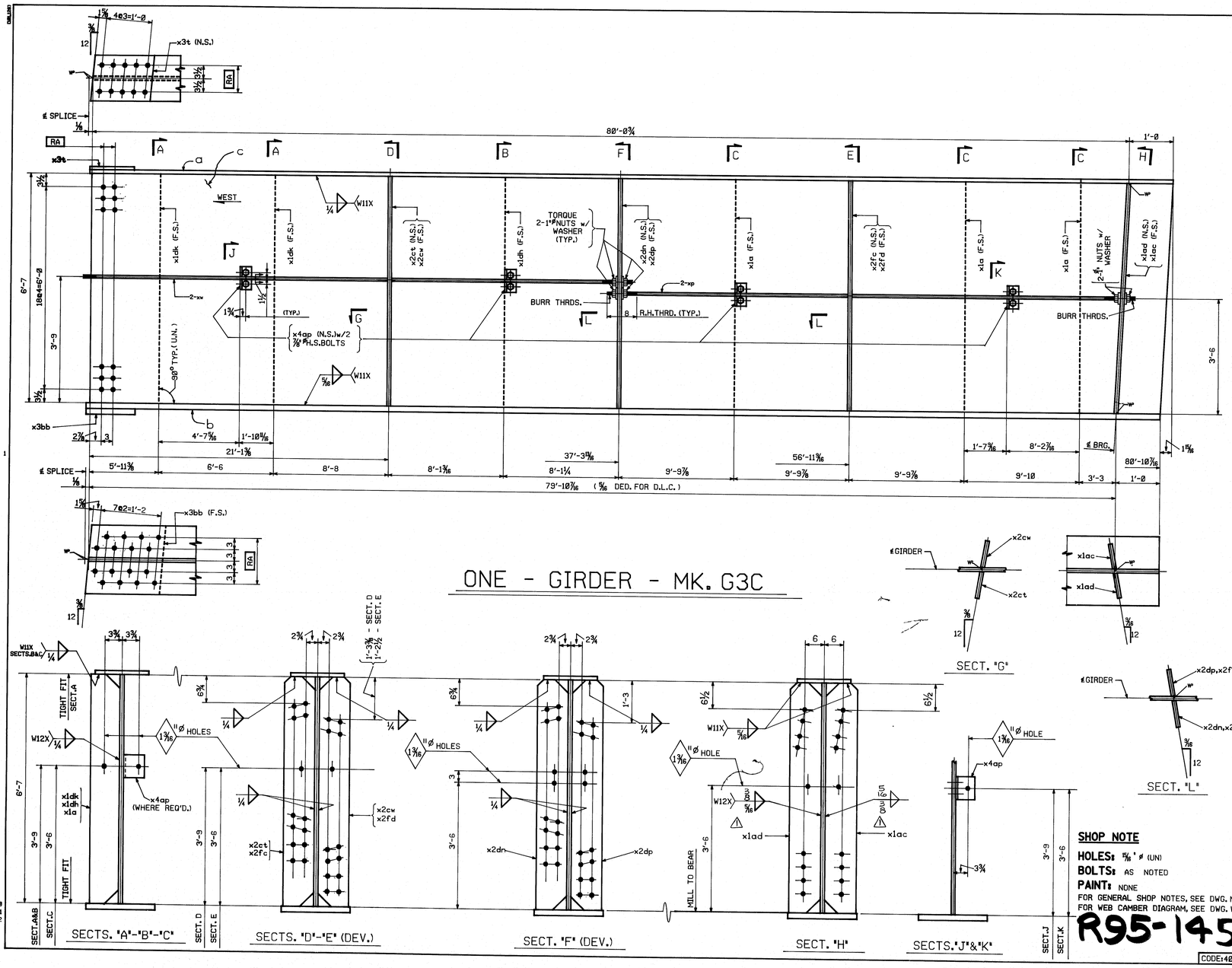

FED.ROAD DIV.NO.	STATE	FED.AID PROJ.NO.
1	ME.	I-IG-395-8(82)176

BILL OF MATERIAL

NO.	MARK	DESCRIPTION	LENGTH		REMARKS	ITEM	SHP. WEIGHT EA.
		ONE-GIRDER MK. G3C					21,780
ONE	a	PL.12 x ¾	81	0 15/16			
ONE	b	PL.18 x 1⅜	80	10¾			
ONE	c	PL.79 x ½	81	0¾			
2	xp	1"ø ROD	42	11⅝	THRD. BOTH ENDS	~~6~~ 12	
2	xw	1"ø ROD	37	7½	THRD. BOTH ENDS	~~6~~ 5	
ONE	x3t	PL.11½x ⅞	1	3⅛			
ONE	x3bb	PL.17½x ¼	1	5⅛			
3	x1a	BAR 5 x 7/16	6	7			
ONE	x1ac	BAR 8 x 1	6	7			
ONE	x1ad	BAR 8 x 1	6	7			
ONE	x1dh	BAR 5 x 7/16	6	7			
2	x1dk	BAR 5 x 7/16	6	7			
ONE	x2ct	BAR 7 x 7/16	6	7			
ONE	x2cw	BAR 7 x 7/16	6	7			
ONE	x2dn	BAR 7 x 7/16	6	7			
ONE	x2dp	BAR 7 x 7/16	6	7			
ONE	x2fc	BAR 7 x 7/16	6	7			
ONE	x2fd	BAR 7 x 7/16	6	7			
4	x4ap	L5 x 3 x ¼	0	6			
12		1"ø STD.HEX.NUTS				BI	12
12		WASHERS FOR 1"ø RODS				BI	8
8		⅞"ø H.S.BOLT	0	2		BI	2
8		WASHERS FOR ⅞"ø BOLTS				BI	9

SHOP NOTE

HOLES: 5/16" ø (UN)
BOLTS: AS NOTED
PAINT: NONE
FOR GENERAL SHOP NOTES, SEE DWG. N1.
FOR WEB CAMBER DIAGRAM, SEE DWG. WC1.

R95-145

CODE:4000

NO.	REVISION	DATE
1	CHANGED WELD SIZES	1-3-85

HIGH STEEL STRUCTURES, INC.
1905 Old Philadelphia Pike Lancaster, Pennsylvania 17603 Phone 717/299-521
A Subsidiary of High Industries, Inc.

GIRDER G3C
I-395 BRIDGE OVER PENOBSCOT RIVER
I-395 BRIDGE STA. 164+60.00
PENOBSCOT COUNTY
STATE OF MAINE
DEPARTMENT OF TRANSPORTATION

STATE CONTRACT OR REF.NO. 6 CONTRACTOR CIANBRO CORP.
IN CHARGE, HINKLE MADE BY C.S. CHK.D. BY G.F.Z. DATE 7/6/84
CONTRACT NUMBER, ME-84088-1 DRAWING NUMBER, 29 OF 36

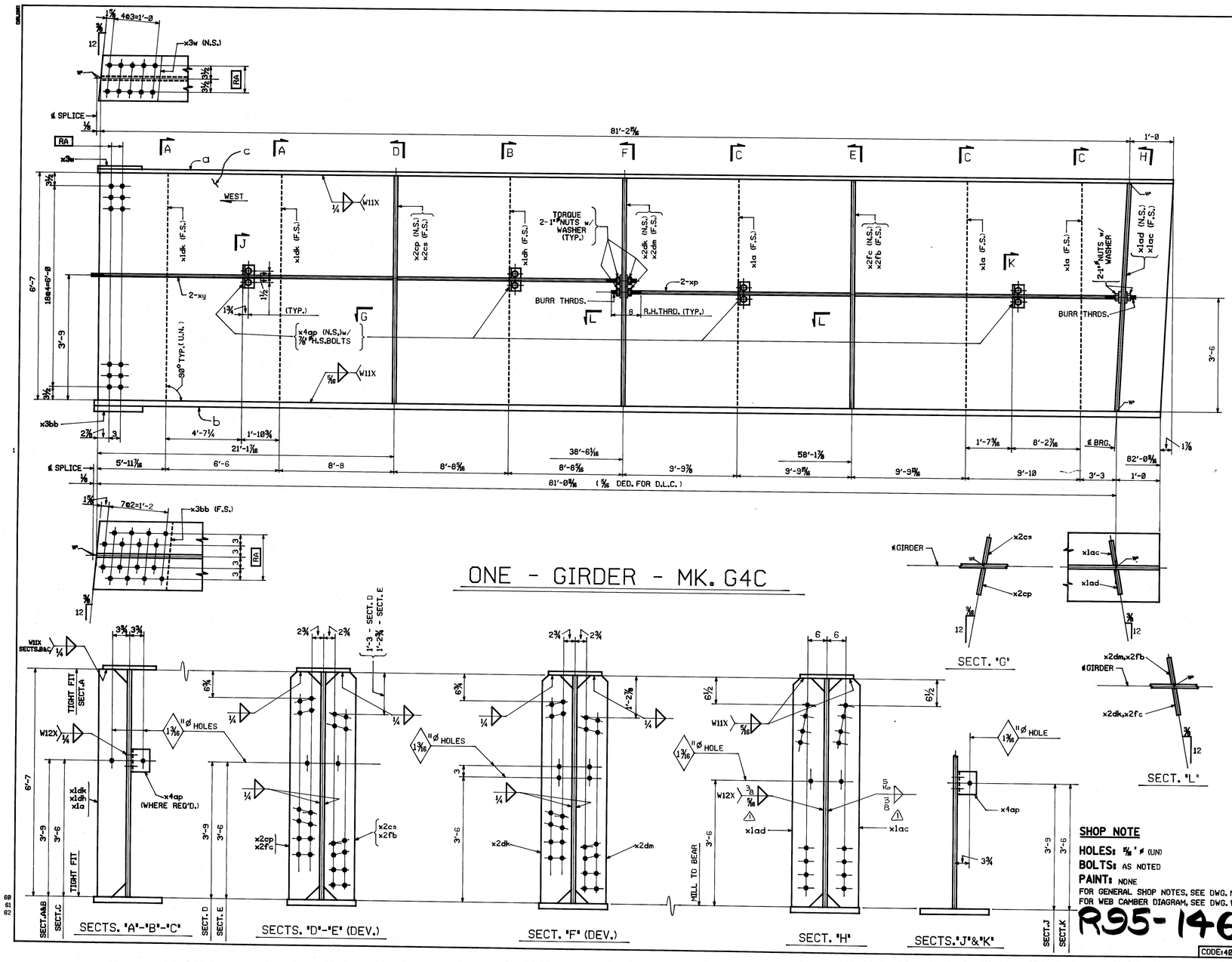

FED.ROAD DIV.NO.	STATE	FED.AID PROJ.NO.
1	ME.	I-IG-395-8(82)176

BILL OF MATERIAL

NO.	MARK	DESCRIPTION	LENGTH		REMARKS	ITEM	SUP. WEIGHT EA.
		ONE-GIRDER MK. G4C					27,080
ONE	a	PL.12 x 3/4	82	3 1/8			
ONE	b	PL.18 x 1 3/8	82	1			
ONE	c	PL.79 x 1/2	82	2 5/16			
2	xp	1"ø ROD	42	11 1/2	THRD. BOTH ENDS	6/12	
2	xy	1"ø ROD	38	9 3/4	THRD. BOTH ENDS	6/7	
ONE	x3w	PL.11 3/16 x 7/8	1	3 1/8			
ONE	x3bb	PL.17 1/2 x 1/4	1	5 1/8			
3	x1a	BAR 5 x 7/16	6	7			
ONE	x1ac	BAR 8 x 1	6	7			
ONE	x1ad	BAR 8 x 1	6	7			
ONE	x1dh	BAR 5 x 7/16	6	7			
2	x1dk	BAR 5 x 7/16	6	7			
ONE	x2cp	BAR 7 x 7/16	6	7			
ONE	x2cs	BAR 7 x 7/16	6	7			
ONE	x2dk	BAR 7 x 7/16	6	7			
ONE	x2dm	BAR 7 x 7/16	6	7			
ONE	x2fb	BAR 7 x 7/16	6	7			
ONE	x2fc	BAR 7 x 7/16	6	7			
4	x4ap	∟5 x 3 x 1/4	0	6			
12		1"ø STD.HEX.NUTS				BI/12	
12		WASHERS FOR 1"ø RODS				BI/8	
8		7/8"ø H.S.BOLT	0	2		BI/2	
8		WASHERS FOR 7/8"ø BOLTS				BI/9	

NO.	REVISION	DATE
1	CHANGED WELD SIZES	1-3-85

HIGH STEEL STRUCTURES, INC.
1506 Old Philadelphia Pike
Lancaster, Pennsylvania 17603
Phone 717/299-513
A Subsidiary of High Industries, Inc.

GIRDER G4C
I-395 BRIDGE OVER PENOBSCOT RIVER
I-395 BRIDGE STA. 164+60.00
PENOBSCOT COUNTY
STATE OF MAINE
DEPARTMENT OF TRANSPORTATION

STATE CONTRACT OR REF.NO. 6 CONTRACTOR CIANBRO CORP.
IN CHARGE: HINKLE MADE BY: C.S. CHK.D. BY: G.F.Z. DATE: 7/6/84
CONTRACT NUMBER: ME-84088-1 DRAWING NUMBER: 30 OF 36

FED.ROAD DIV.NO.	STATE	FED.AID PROJ.NO.
1	ME.	I-IG-395-8(82)176

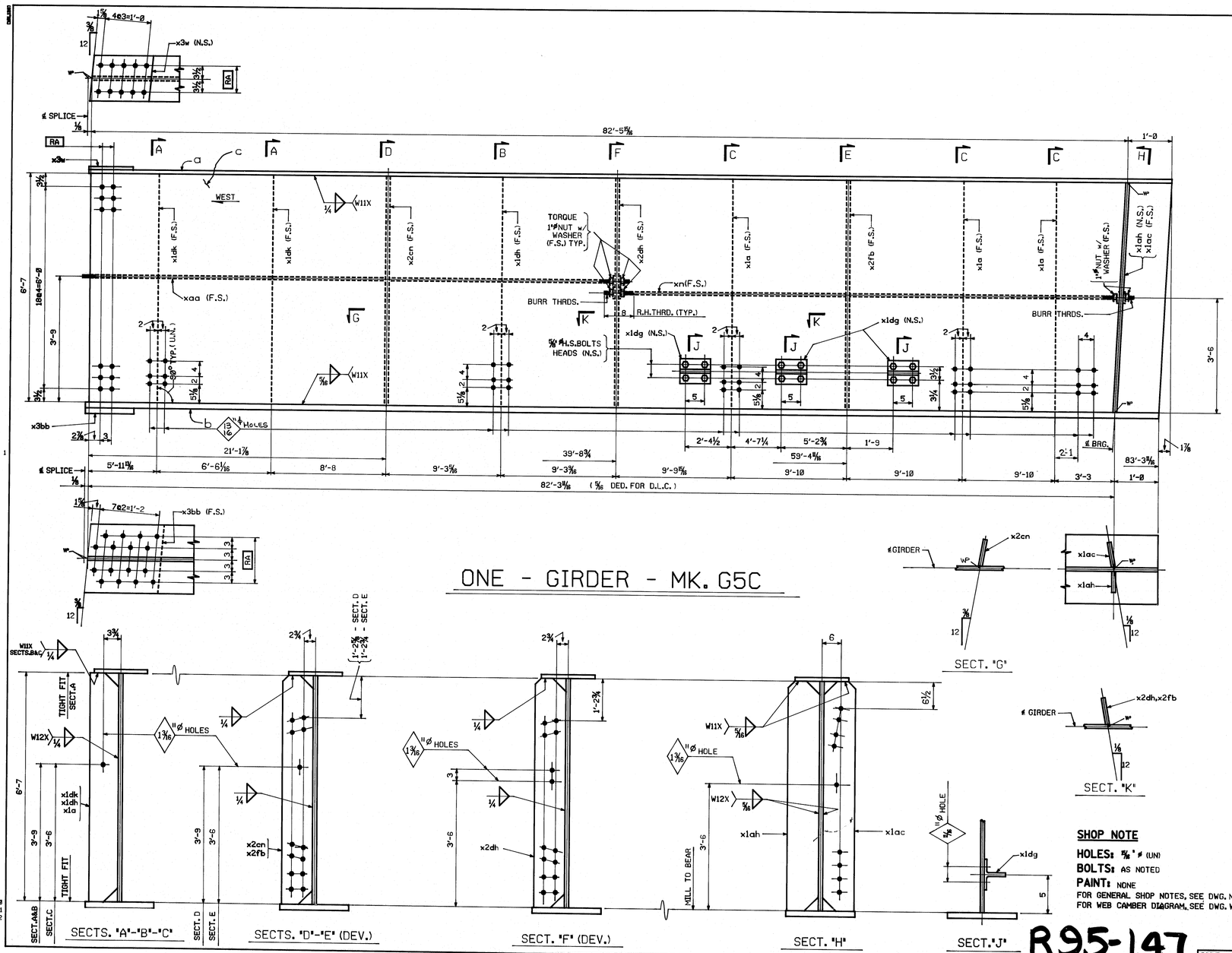

BILL OF MATERIAL

NO.	MARK	DESCRIPTION	LENGTH		REMARKS	ITEM	SHP. WGHT EA.
		ONE-GIRDER MK. G5C					21960
ONE	a	PL.12 x 3/4	83	6 1/8			
ONE	b	PL.18 x 1 3/8	83	4			
ONE	c	PL.79 x 1/2	83	5 5/16			
ONE	xn	1"ø ROD	42	11 7/8	THRD. BOTH ENDS	6/12	
ONE	xaa	1"ø ROD	40	0 1/2	THRD. BOTH ENDS	6/9	
ONE	x3w	PL.11 3/8 x 7/8	1	3 1/8			
ONE	x3bb	PL.17 1/2 x 1/4	1	5 1/8			
3	x1a	BAR 5 x 7/16	6	7			
ONE	x1ac	BAR 8 x 1	6	7			
ONE	x1ah	BAR 8 x 1	6	7			
ONE	x1dh	BAR 5 x 7/16	6	7			
2	x1dk	BAR 5 x 7/16	6	7			
ONE	x2cn	BAR 7 x 7/16	6	7			
ONE	x2dh	BAR 7 x 7/16	6	7			
ONE	x2fb	BAR 7 x 7/16	6	7			
3	x1dg	WT 6 x 13	0	8			
6		1"ø STD.HEX.NUTS				B1/12	
6		WASHERS FOR 1"ø RODS				B1/8	
12		5/8"ø H.S.BOLT	0	2		B1/6	
12		WASHERS FOR 5/8"ø H.S.BOLTS				B1/10	

SHOP NOTE

HOLES: 5/8" ø (UN)
BOLTS: AS NOTED
PAINT: NONE
FOR GENERAL SHOP NOTES, SEE DWG. N1.
FOR WEB CAMBER DIAGRAM, SEE DWG. W1.

R95-147

CODE:4000

NO.	REVISION	DATE

HIGH STEEL STRUCTURES, INC.
1905 Old Philadelphia Pike Lancaster, Pennsylvania 17603 Phone 717/299-523
A Subsidiary of High Industries, Inc.

GIRDER G5C
I-395 BRIDGE OVER PENOBSCOT RIVER
I-395 BRIDGE STA. 164+60.00
PENOBSCOT COUNTY
STATE OF MAINE
DEPARTMENT OF TRANSPORTATION

STATE CONTRACT OR REF.NO. 6 CONTRACTOR CIANBRO CORP.
IN CHARGE: HINKLE MADE BY: C.S. CHK.D. BY: G.F.Z. DATE: 7/6/84
CONTRACT NUMBER: ME-84088-1 DRAWING NUMBER: 31 OF 36

FED.ROAD DIV.NO.	STATE	FED.AID PROJ.NO.
1	ME.	I-IG-395-8(82)176

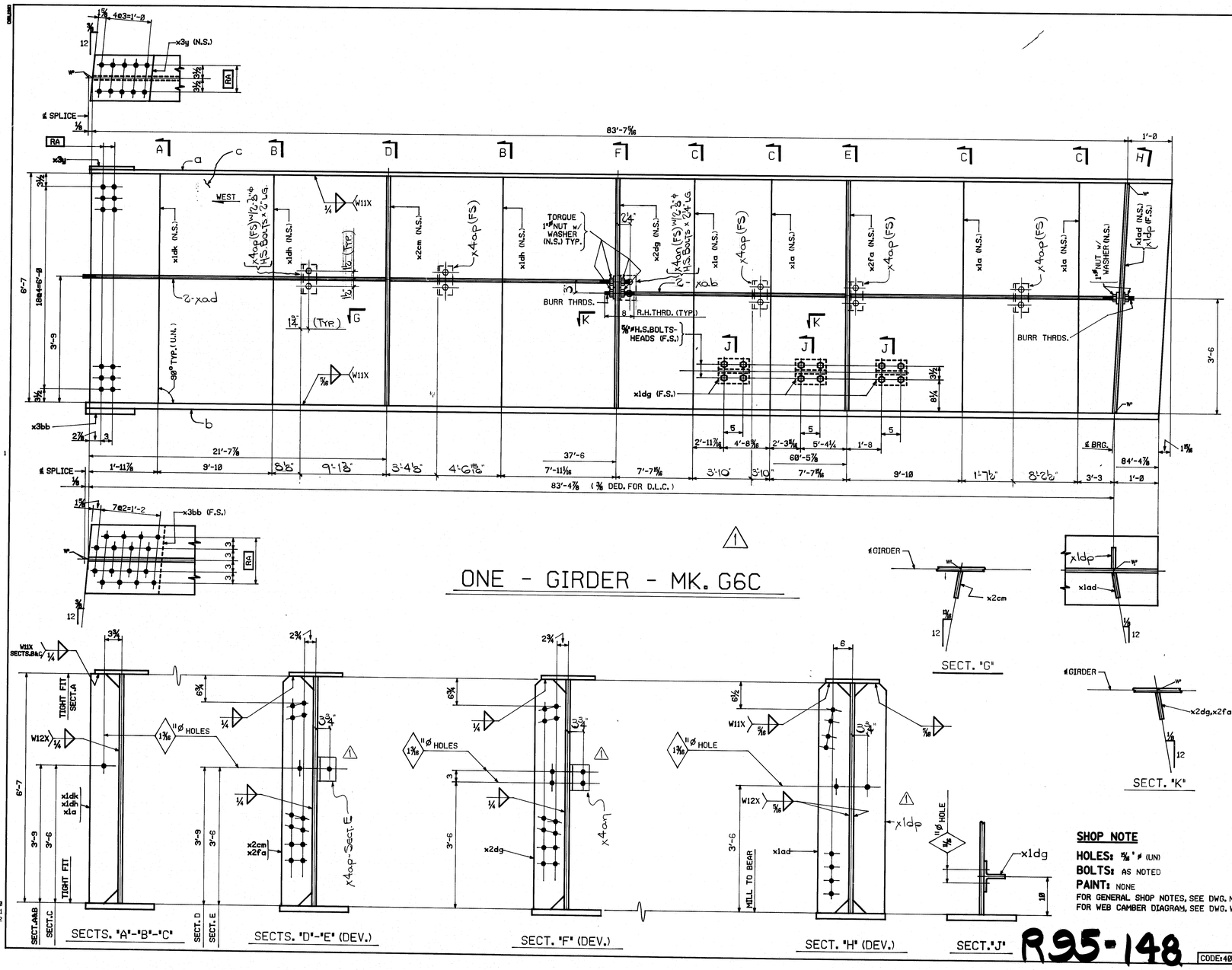

ONE - GIRDER - MK. G6C

BILL OF MATERIAL

NO.	MARK	DESCRIPTION	LENGTH		REMARKS	ITEM	SHIP. WEIGHT EA.
		ONE-GIRDER MK. G6C					23,210
ONE	a	PL.12 x ¾	84	7½			
ONE	b	PL.18 x 1½	84	5⅝			
ONE	c	PL.79 x ½	84	7⅝			
2	xab	1"ø ROD	46	3¾	THRD. BOTH ENDS	6/14	
2	xad	1"ø ROD	37	9⅝	THRD. BOTH ENDS	6/6	
ONE	x3y	PL.11⅜ x 1	1	3⅛			
ONE	x3bb	PL.17½ x ¼	1	5⅛			
ONE	x4an	∟5 x 3½ x ½	0	6			
5	x4ap	∟5 x 3 x ¼	0	6			
4	x1a	BAR 5 x 7/16	6	7			
ONE	x1ad	BAR 8 x 1	6	7			
ONE	x1dp	BAR 8 x 1	6	7			
2	x1dh	BAR 5 x 7/16	6	7			
ONE	x1dk	BAR 5 x 7/16	6	7			
ONE	x2cm	BAR 7 x 7/16	6	7			
ONE	x2dg	BAR 7 x 7/16	6	7			
ONE	x2fa	BAR 7 x 7/16	6	7			
3	x1dg	WT6 x 13	0	8			
12		1"ø STD.HEX.NUTS				B1	12
12		WASHERS FOR 1"ø RODS				B1	8
12		⅝"ø H.S.BOLTS	0	2		B1	6
12		WASHERS FOR ⅝"ø H.S.BOLTS				B1	10
2		⅞"ø H.S.BOLT	0	2¼		B1	3
10		⅞"ø H.S.BOLT	0	2		B1	2
12		WASHERS FOR ⅞"ø H.S.BOLTS				B1	9

SHOP NOTE

HOLES: ⅝"ø (UN)
BOLTS: AS NOTED
PAINT: NONE
FOR GENERAL SHOP NOTES, SEE DWG. N1.
FOR WEB CAMBER DIAGRAM, SEE DWG. WC1.

NO.	REVISION	DATE
1	contract revision control # 14	9-10-84

HIGH STEEL STRUCTURES, INC.
1906 Old Philadelphia Pike
Lancaster, Pennsylvania 17603
Phone 717/299-523
A Subsidiary of High Industries, Inc.

GIRDER G6C
I-395 BRIDGE OVER PENOBSCOT RIVER
I-395 BRIDGE STA. 164+60.00
PENOBSCOT COUNTY
STATE OF MAINE
DEPARTMENT OF TRANSPORTATION

STATE CONTRACT OR REF.NO. 6 CONTRACTOR CIANBRO CORP.
IN CHARGE: HINKLE MADE BY: C.S. CHK.D. BY: G.F.Z. DATE: 7/6/84
CONTRACT NUMBER: ME-84088-1 DRAWING NUMBER: 32 OF 36

R95-148

CODE: 4000

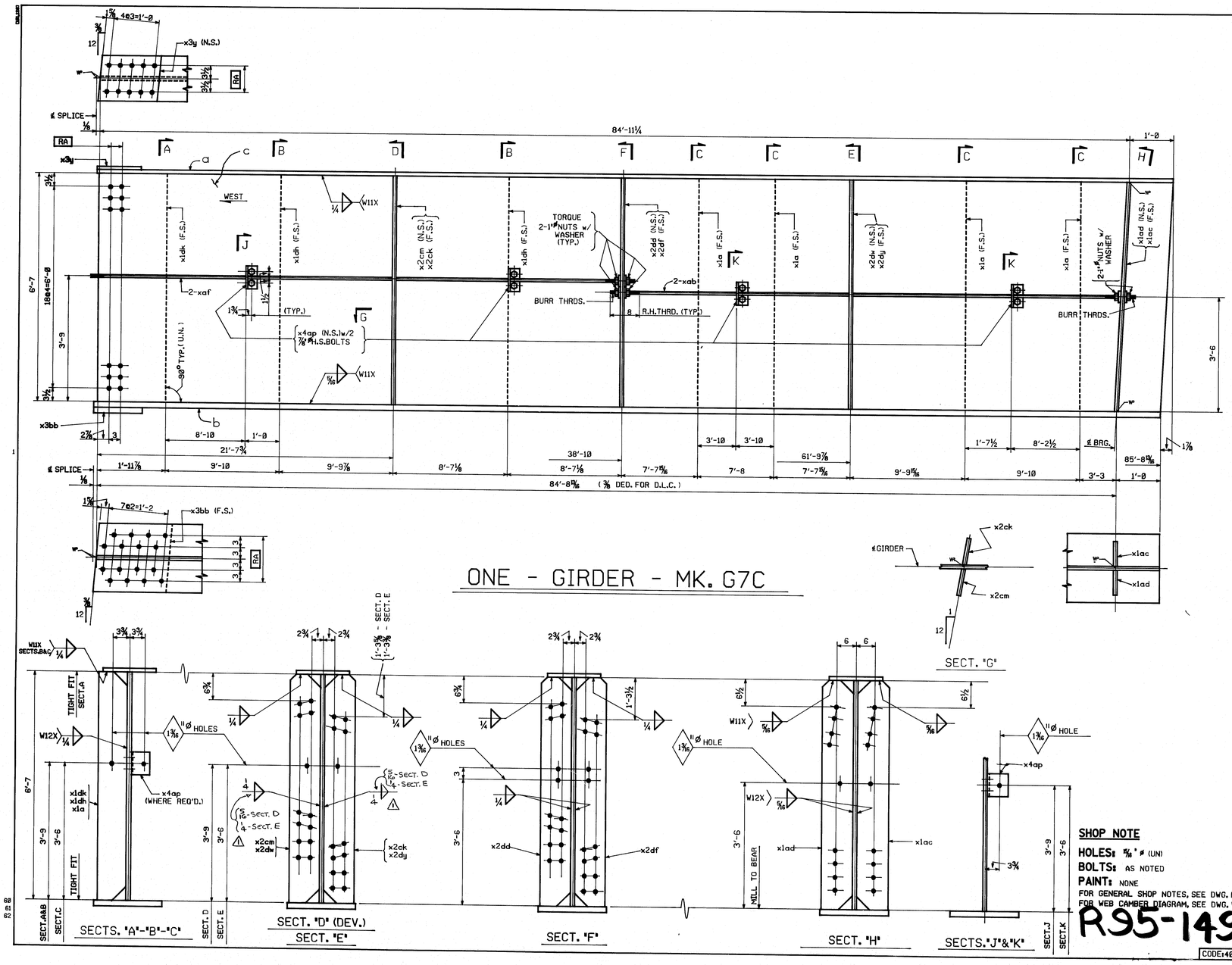

FED.ROAD DIV.NO.	STATE	FED.AID PROJ.NO.
1	ME.	I-IG-395-8(821)76

BILL OF MATERIAL

NO.	MARK	DESCRIPTION	LENGTH		REMARKS	ITEM	SHP. WEIGHT EA.
		ONE-GIRDER MK. G7C					23135
ONE	a	PL.12 x ¾	85	11 7/16			
ONE	b	PL.18 x 1½	85	9⅛			
ONE	c	PL.79 x ½	85	11¼			
2	xab	1"ø ROD	46	3¾	THRD. BOTH ENDS	6/14	
2	xaf	1"ø ROD	39	1¾	THRD. BOTH ENDS	6/8	
ONE	x3y	PL.11¾x 1	1	3⅛			
ONE	x3bb	PL.17½x ¼	1	5⅛			
4	x1a	BAR 5 x 7/16	6	7			
ONE	x1ac	BAR 8 x 1	6	7			
ONE	x1ad	BAR 8 x 1	6	7			
2	x1dh	BAR 5 x 7/16	6	7			
ONE	x1dk	BAR 5 x 7/16	6	7			
ONE	x2ck	BAR 7 x 7/16	6	7			
ONE	x2cm	BAR 7 x 7/16	6	7			
ONE	x2dd	BAR 7 x 7/16	6	7			
ONE	x2df	BAR 7 x 7/16	6	7			
ONE	x2dw	BAR 7 x 7/16	6	7			
ONE	x2dy	BAR 7 x 7/16	6	7			
4	x4ap	L 5 x 3 x ¼	0	6			
12		1"ø STD.HEX.NUTS				B1/12	
12		WASHERS FOR 1"ø RODS				B1/8	
8		⅞"ø H.S.BOLTS	0	2		B1/2	
8		WASHERS FOR ⅞"ø H.S.BOLTS				B1/9	

SHOP NOTE

HOLES: 15/16" ø (UN)

BOLTS: AS NOTED

PAINT: NONE

FOR GENERAL SHOP NOTES, SEE DWG. N1.
FOR WEB CAMBER DIAGRAM, SEE DWG. WC1.

R95-149

CODE:4000

NO.	REVISION	DATE
1	CHANGED WELD SIZES	1-3-85

HIGH STEEL STRUCTURES, INC.
1505 Old Philadelphia Pike
Lancaster, Pennsylvania 17603
Phone 717/299-925
A Subsidiary of High Industries, Inc.

GIRDER G7C
I-395 BRIDGE OVER PENOBSCOT RIVER
I-395 BRIDGE STA. 164+60.00
PENOBSCOT COUNTY
STATE OF MAINE
DEPARTMENT OF TRANSPORTATION

STATE CONTRACT OR REF.NO. 6 CONTRACTOR CIANBRO CORP.

IN CHARGE: HINKLE MADE BY: C.S. CHK.D. BY: G.F.Z. DATE: 7/6/84

CONTRACT NUMBER ME-84088-1 DRAWING NUMBER 33 OF 36

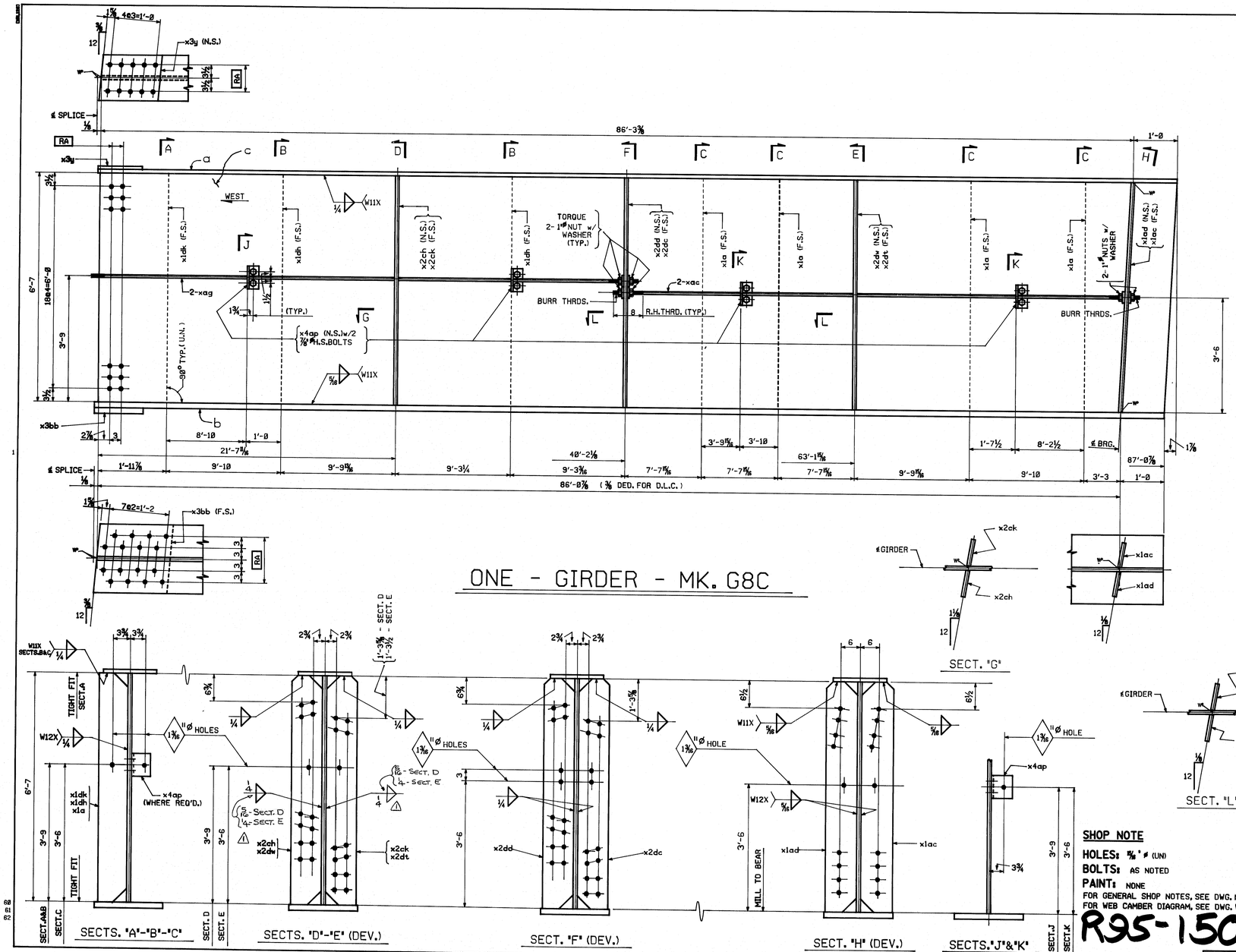

FED.ROAD DIV.NO.	STATE	FED.AID PROJ.NO.
1	ME.	I-IG-395-8(82)176

BILL OF MATERIAL

NO.	MARK	DESCRIPTION	LENGTH		REMARKS	ITEM	SHOP WEIGHT EA.
		ONE-GIRDER MK. G8C					24,085
ONE	a	PL.12 x ¾	87	3 9/16			
ONE	b	PL.18 x 1½	87	1 7/16			
ONE	c	PL.79 x ½	87	3⅜			
2	xac	1"ø ROD	46	3⅝	THRD. BOTH ENDS	6/14	
2	xag	1"ø ROD	40	6¼	THRD. BOTH ENDS	6/4	
ONE	x3y	PL.11⅜ x 1	1	3⅛			
ONE	x3bb	PL.17½ x ¼	1	5⅛			
4	x1a	BAR 5 x 7/16	6	7			
ONE	x1ac	BAR 8 x 1	6	7			
ONE	x1ad	BAR 8 x 1	6	7			
2	x1dh	BAR 5 x 7/16	6	7			
ONE	x1dk	BAR 5 x 7/16	6	7			
ONE	x2ch	BAR 7 x 7/16	6	7			
ONE	x2ck	BAR 7 x 7/16	6	7			
ONE	x2dc	BAR 7 x 7/16	6	7			
ONE	x2dd	BAR 7 x 7/16	6	7			
ONE	x2dt	BAR 7 x 7/16	6	7			
ONE	x2dw	BAR 7 x 7/16	6	7			
4	x4ap	∟5 x 3 x ¼	Ø	6			
12		1"ø STD.HEX.NUTS				B1/12	
12		WASHERS FOR 1"ø RODS				B1/8	
8		⅞"ø H.S.BOLTS	Ø	2		B1/2	
8		WASHERS FOR ⅞"ø H.S.BOLTS				B1/9	

SHOP NOTE

HOLES: 5/16" ø (UN)

BOLTS: AS NOTED

PAINT: NONE

FOR GENERAL SHOP NOTES, SEE DWG. N1.
FOR WEB CAMBER DIAGRAM, SEE DWG. W1.

R95-150

CODE: 4000

NO.	REVISION	DATE
1	CHANGED WELD SIZES	1-3-85

HIGH STEEL STRUCTURES, INC.
1905 Old Philadelphia Pike
Lancaster, Pennsylvania 17603
Phone 717/299-533
A Subsidiary of High Industries, Inc.

GIRDER G8C
I-395 BRIDGE OVER PENOBSCOT RIVER
I-395 BRIDGE STA. 164+60.00
PENOBSCOT COUNTY
STATE OF MAINE
DEPARTMENT OF TRANSPORTATION

STATE CONTRACT OR REF.NO. 6 CONTRACTOR CIANBRO CORP.

IN CHARGE: HINKLE MADE BY: C.S. CHK.D. BY: G.F.Z. DATE: 7/6/84

CONTRACT NUMBER: ME-84088-1 DRAWING NUMBER: 34 OF 36

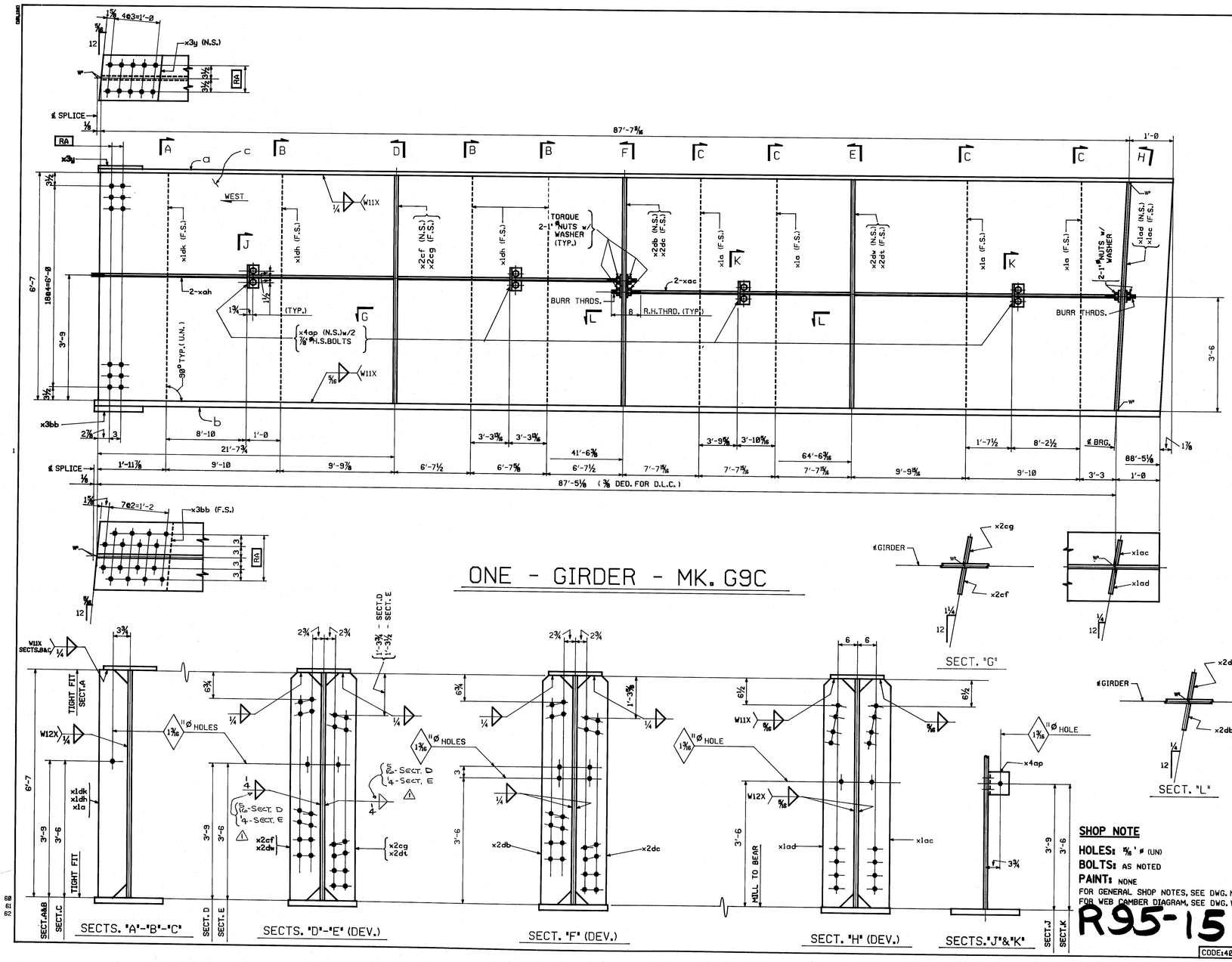

FED.ROAD DIV.NO.	STATE	FED.AID PROJ.NO.
1	ME.	I-IG-395-8(82)176

BILL OF MATERIAL

NO.	MARK	DESCRIPTION	LENGTH		REMARKS	ITEM	SHP. WEIGHT EA.
		ONE-GIRDER MK. G9C					24,490
ONE	a	PL.12 x 3/4	88	7 7/8			
ONE	b	PL.18 x 1 1/2	88	5 5/8			
ONE	c	PL.79 x 1/2	88	7 5/16			
2	xac	1"ø ROD	46	3 5/8	THRD. BOTH ENDS	6/14	
2	xah	1"ø ROD	41	10	THRD. BOTH ENDS	6/11	
ONE	x3y	PL.11 3/8 x 1	1	3 1/8			
ONE	x3bb	PL.17 1/2 x 1/4	1	5 1/8			
4	x1a	BAR 5 x 7/16	6	7			
ONE	x1ac	BAR 8 x 1	6	7			
ONE	x1ad	BAR 8 x 1	6	7			
3	x1dh	BAR 5 x 7/16	6	7			
ONE	x1dk	BAR 5 x 7/16	6	7			
ONE	x2cf	BAR 7 x 7/16	6	7			
ONE	x2cg	BAR 7 x 7/16	6	7			
ONE	x2db	BAR 7 x 7/16	6	7			
ONE	x2dc	BAR 7 x 7/16	6	7			
ONE	x2dt	BAR 7 x 7/16	6	7			
ONE	x2dw	BAR 7 x 7/16	6	7			
4	x4ap	L 5 x 3 x 1/4	0	6			
12		1"# STD.HEX.NUTS				BI/12	
12		WASHERS FOR 1"# RODS				BI/8	
8		7/8"# H.S.BOLTS	0	2		BI/2	
8		WASHERS FOR 7/8"# H.S.BOLTS				BI/9	

SHOP NOTE

HOLES: 5/16" ø (UN)

BOLTS: AS NOTED

PAINT: NONE

FOR GENERAL SHOP NOTES, SEE DWG. N1.
FOR WEB CAMBER DIAGRAM, SEE DWG. WC1.

R95-151

CODE:4000

NO.	REVISION	DATE
1	CHANGED WELD SIZES	1-3-85

HIGH STEEL STRUCTURES, INC.
1905 Old Philadelphia Pike
Lancaster, Pennsylvania 17603
Phone 717/299-521
A Subsidiary of High Industries, Inc.

GIRDER G9C
I-395 BRIDGE OVER PENOBSCOT RIVER
I-395 BRIDGE STA. 164+60.00
PENOBSCOT COUNTY
STATE OF MAINE
DEPARTMENT OF TRANSPORTATION

STATE CONTRACT OR REF.NO. 6 CONTRACTOR CIANBRO CORP.
IN CHARGE: HINKLE MADE BY: C.S. CHK.D. BY: G.F.Z. DATE: 7/9/84
CONTRACT NUMBER: ME-84088-1 DRAWING NUMBER: 35 OF 36

FED.ROAD DIV.NO.	STATE	FED.AID PROJ.NO.
1	ME.	I-IG-395-8(821)76

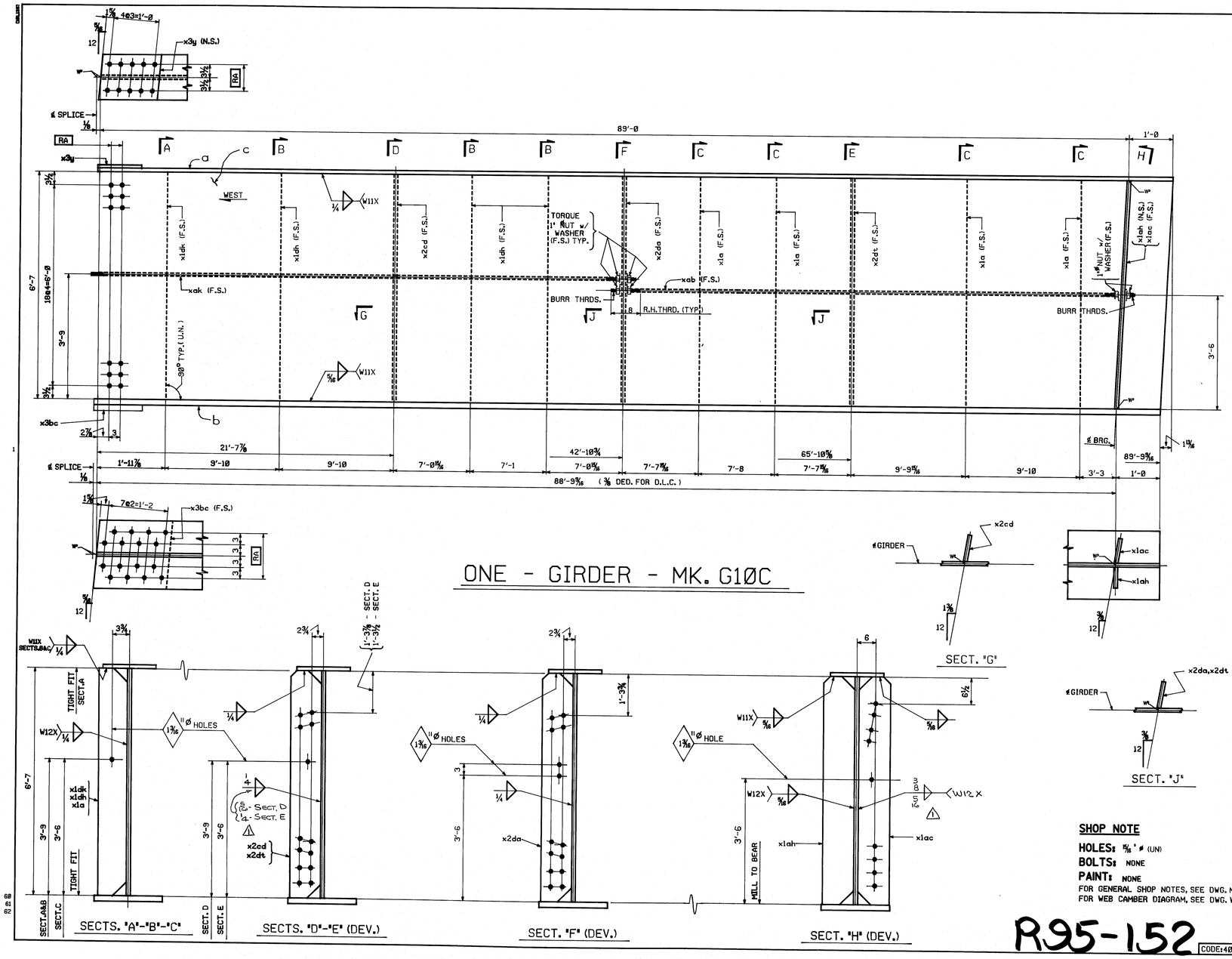

BILL OF MATERIAL

NO.	MARK	DESCRIPTION	LENGTH		REMARKS	ITEM	SHIP. WEIGHT EA.
		ONE-GIRDER MK. G10C					24330
ONE	a	PL.12 x 3/4	90	0 9/16			
ONE	b	PL.18 x 1 1/2	89	9 9/16			
ONE	c	PL.79 x 1/2	90	0			
ONE	xab	1"ø ROD	46	3 3/4	THRD. BOTH ENDS	6/14	
ONE	xak	1"ø ROD	43	2 1/2	THRD. BOTH ENDS	6/13	
ONE	x3y	PL.11 3/8 x 1	1	3 1/8			
ONE	x3bc	PL.17 3/8 x 1/4	1	5 1/8			
4	x1a	BAR 5 x 7/16	6	7			
ONE	x1ac	BAR 8 x 1	6	7			
ONE	x1ah	BAR 8 x 1	6	7			
3	x1dh	BAR 5 x 7/16	6	7			
ONE	x1dk	BAR 5 x 7/16	6	7			
ONE	x2cd	BAR 7 x 7/16	6	7			
ONE	x2da	BAR 7 x 7/16	6	7			
ONE	x2dt	BAR 7 x 7/16	6	7			
6		1"ø STD.HEX.NUTS				B1/12	
6		WASHERS FOR 1"ø RODS				B1/8	

SHOP NOTE

HOLES: 9/16" ø (UN)
BOLTS: NONE
PAINT: NONE
FOR GENERAL SHOP NOTES, SEE DWG. N1.
FOR WEB CAMBER DIAGRAM, SEE DWG. WC1.

R95-152

CODE:4000

NO.	REVISION	DATE
1	CHANGED WELD SIZES	1-3-85

HIGH STEEL STRUCTURES, INC.
1905 Old Philadelphia Pike Lancaster, Pennsylvania 17603 Phone 717/299-523
A Subsidiary of High Industries, Inc.

GIRDER G10C
I-395 BRIDGE OVER PENOBSCOT RIVER
I-395 BRIDGE STA. 164+60.00
PENOBSCOT COUNTY
STATE OF MAINE
DEPARTMENT OF TRANSPORTATION

STATE CONTRACT OR REF.NO. 6 CONTRACTOR CIANBRO CORP.
IN CHARGE: HINKLE MADE BY: C.S. CHK.D. BY: G.F.Z. DATE: 7/9/84
CONTRACT NUMBER: ME-84088-1 DRAWING NUMBER: 36 OF 36

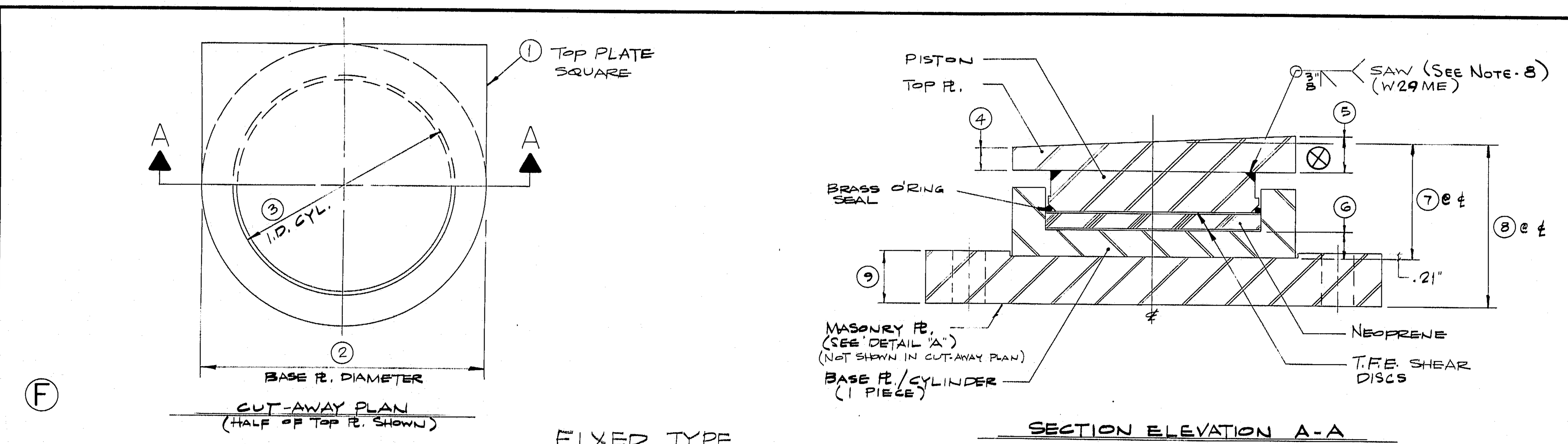

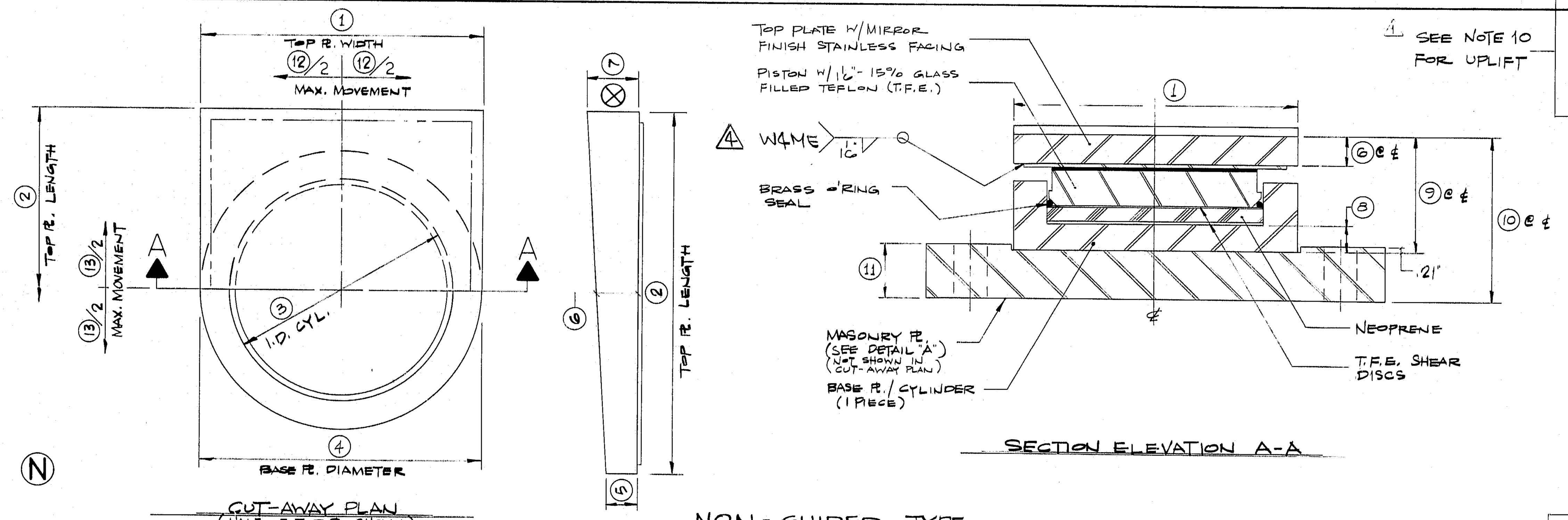

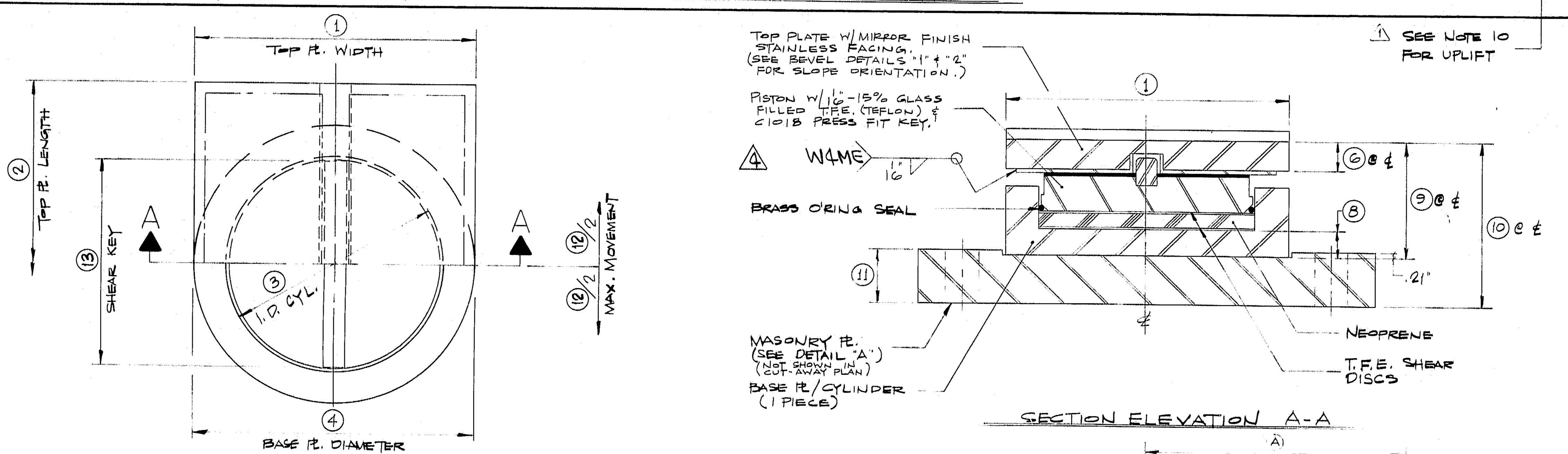

GUIDED TYPE

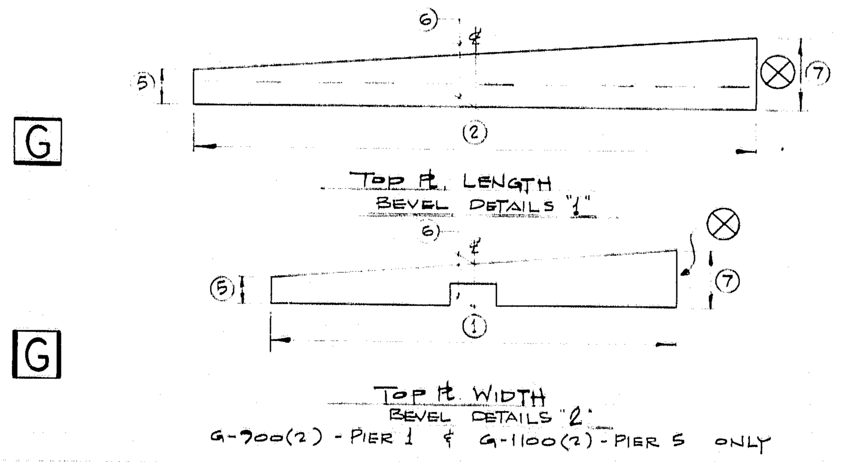

SHIPMENT SCHEDULE

#1. Abut 1, Pier 1, Pier 2-Span 2.

#2. Pier 2-Span 3, Pier 3, Pier 4.

#3. Piers 5, 6, 7, Abut 2.

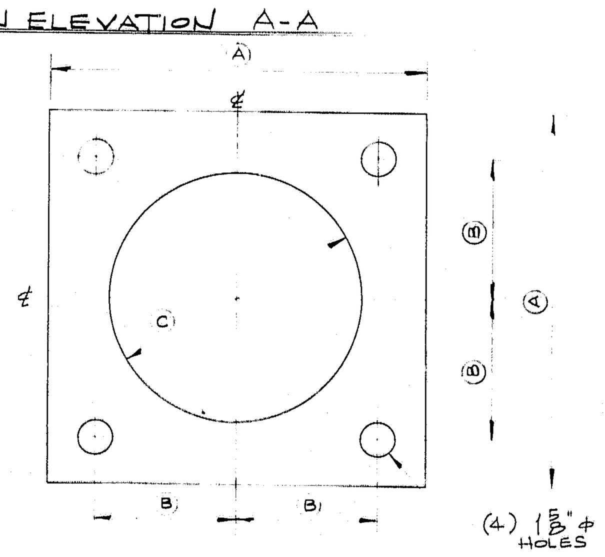

POT BEARING DATA & DETAILS

Fed. Road Div. No.	State	Fed. Aid Proj. No.

Location	Girder	Quan	Bearing Type	Slope	Max. Vert. LD (K)	Lat. LD (K)	Wt/Ea. (lbs) †	①	②	③	④	⑤	⑥	⑦	⑧	⑨	⑩	⑪	⑫	⑬	Ⓐ	Ⓑ	Ⓒ	Min. Vert LD (K)
Pier 1	4	1	F-900	+2.2	892	90.	1113.	22 7/8"	22 7/8"	18.48	.97"	1.47"	1.50"	5.73"	7 5/8"	2.08"	—	—	—	—	30 3/4"	13 1/8"	23"	585
Pier 1	7	1	F-900	+2.4	892	90.	1113.	22 7/8"	22 7/8"	18.48	.95"	1.49"	1.50"	5.73"	7 5/8"	2.08"	—	—	—	—	30 3/4"	13 1/8"	23"	585
Pier 5	4,5	2	F-1100	-1.4	1061	110.	1443.	25 3/8"	25 3/8"	20.16	1.04"	1.40"	1.71"	6.17"	8 1/4"	2.27"	—	—	—	—	33 1/4"	14 3/8"	25 1/2"	650
Pier 2-Span 2	1	1	N-350(2)	+2.7	301	35.	403.	14 3/4"	15 3/4"	10.74	14 3/4"	1.04"	1.25"	1.46"	1.00"	4.48	5 3/4"	1.46	1"	2"	22 5/8"	9 1/16"	14 7/8"	122
	2	1		+2.5								1.05"		1.45"										
	3,6	2		+2.3								1.07"		1.43"										
	5,8,9	3		+2.2								1.08"		1.42"										
Pier 2-Span 2	10	1	N-350(2)	+2.1	301	35	403.	14 3/4"	15 3/4"	10.74"	14 3/4"	1.08"	1.25"	1.42"	1.00"	4.48"	5 3/4"	1.46"			22 5/8"	9 1/16"	14 7/8"	122
Abut. 1	1	1	N-400(2)	+2.8	356	40.	451.	15 5/8"	16 5/8"	11.89"	15 5/8"	1.00"	1.23"	1.46"	1.02"	4.50	5 13/16"	1.50"			23 1/2"	9 1/2"	15 3/4"	151
	3,5	2		+2.4								1.03"		1.43"										
	6	1		+2.3								1.04"		1.42"										
	8,9	2		+2.7								1.01"		1.45"										
Abut. 1	2,10	2	N-400(2)	+2.6	356		451.	15 5/8"	16 5/8"			1.01"	1.23"	1.45"		4.50	5 13/16"			2"				151
Abut. 2	1	1	N-400(7)	-2.8	369		526.	16 1/4"	21 5/8"			1.36"	1.66"	1.96"		4.93	6 1/4"			7"				195
Abut. 2	2,3,6,7,8	5	N-400(7)	-2.9	369	40.	526.	16 1/4"	21 5/8"	11.89"	15 5/8"	1.35"	1.66"	1.97"	1.02"	4.93"	6 1/4"	1.50"		7"	23 1/2"	9 1/2"	15 3/4"	195
Pier 2-Span 3	1	1	N-600(9)	+1.3	520	60.	930.	21 1/4"	26 1/2"	14.11"	18 7/8"	1.87"	2.04"	2.21"	1.20"	5.85"	7 3/8"	1.71"		9"	28 1/2"	11 1/8"	19"	273
	2			+1.2								1.88"		2.20"										
	3			+1.1								1.89"		2.19"										
	6			+0.9								1.92"		2.16"										
	7			+0.8								1.93"		2.15"										
Pier 2-Span 3	8	1	N-600(9)	+0.7	520	60.	930.	21 1/4"	26 1/2"	14.11"	18 7/8"	1.95"	2.04"	2.13"	1.20"	5.85	7 3/8"	1.71"		9"	28 1/2"	11 1/8"	19"	273
Pier 6	1,2,3,6,7,8	6	N-1000(3)	-2.4	952	100	1410.	25 1/2"	25"	19.09"	24"	1.61"	1.91"	2.21"	1.57"	6.65	8 5/8"	2.18"		3"	31 7/8"	13 11/16"	24 1/8"	580
Pier 7	1,2,3,6	4	N-1100(5)	-2.8	1022	110	1654.	25 3/8"	28 3/8"	20.16"	25 3/8"	1.65"	2.05"	2.45"	1.71"	7.12	9 3/16"	2.27"		5"	33 1/4"	14 3/8"	25 1/2"	683
Pier 7	7,8	2	N-1100(5)	-2.9	1022	110.	1654.	25 3/8"	28 3/8"	20.16"	25 3/8"	1.64"	2.05"	2.46"	1.71"	7.12	9 3/16"	2.27"		5"	33 1/4"	14 3/8"	25 1/2"	683
Pier 4	1	1	N-1500(3)	+0.1	1420	150	2472.	29 1/4"	30 1/4"	23.32"	29 1/4"	2.07"	2.09"	2.11"	1.95"	7.85	10 5/16"	2.65"		3"	38 3/4"	16 3/8"	29 3/8"	970
	2,3	2		0.0								2.09"		2.09"										
	6	1		-0.4								2.03"		2.15"										
	7			-0.6								2.00"		2.18"										
Pier 4	8		N-1500(3)	-0.8	1420	150.	2472.	29 1/4"	30 1/4"	23.32"	29 1/4"	1.97"	2.09"	2.21"	1.95"	7.85"	10 5/16"	2.65"		3"	38 3/4"	16 3/8"	29 3/8"	970
Pier 3	1		N-1800(7)	+0.9	1715	180.	3272.	33"	37"	25.63"	32"	2.11"	2.28"	2.45"	2.08"	8.39	11 1/8	2.86		7"	42 1/2"	18 1/4"	32 1/8"	1270
	2			+0.8								2.13"		2.43"										
	3			+0.7								2.15"		2.41"										
	6			+0.5								2.19"		2.37"										
	7			+0.4								2.21"		2.35"										
Pier 3	8	1	N-1800(7)	+0.3	1715	180.	3272	33"	37"	25.63"	32"	2.22"	2.28	2.34"	2.08"	8.39	11 1/8"	2.86	1"	7"	42 1/2"	18 1/4"	32 1/8"	1270
Pier 2-Span 2	4,7	2	G-350(2)	+2.3	301	35.	403.	14 3/4"	15 3/4"	10.74"	14 3/4"	1.07"	1.25"	1.43"	1.00"	4.48	5 3/4"	1.46"	2"	11 1/2"	22 5/8"	9 1/16"	14 7/8"	122
Abut. 1	4	1	G-400(2)	+2.2	356	40.	451.	15 5/8"	16 5/8"	11.89"	15 5/8"	1.05"	1.23"	1.41"	1.02"	4.50	5 13/16"	1.50"	2"	12 5/16"	23 1/2"	9 1/2"	15 3/4"	151
Abut. 1	7	1	G-400(2)	+2.5	356	40.	451.	15 5/8"	16 5/8"	11.89"	15 5/8"	1.02"	1.23"	1.44"	1.02"	4.50	5 13/16"	1.50"	2"	12 5/16"	23 1/2"	9 1/2"	15 3/4"	151
Abut. 2	4,5	2	G-400(7)	-2.9	369	40.	526.	16 1/4"	21 5/8"	11.89"	15 5/8"	1.35"	1.66"	1.97"	1.02"	4.93"	6 1/4"	1.50"	7	12 5/16"	23 1/2"	9 1/2"	15 3/4"	195
Pier 2-Span 3	4,5	2	G-600(9)	+1.0	520	60.	930.	21 1/4"	26 1/2"	14.11"	18 7/8"	1.91"	2.04"	2.17"	1.20"	5.85	7 3/8"	1.71"	9"	15 1/16"	28 1/2"	11 1/8"	19"	273
Pier 1 *	1	1	G-900(2)	+2.7	892	90	1225.	22 7/8"	23"	18.48	22 7/8"	1.59"	1.90"	2.21"	1.50"	6.53	8 7/16"	2.08"	2"	18 1/2"	30 3/4"	13 1/8"	23"	585
*	2	1		+2.6								1.60"		2.20"										
*	3,8,9,10	4		+2.4								1.63"		2.17"										
Pier 1 *	5,6	2	G-900(2)	+2.5	892	90.	1225.	22 7/8"	23"	18.48	22 7/8"	1.61"	1.90"	2.19"	1.50"	6.53	8 7/16"	2.08"	2"	18 1/2"	30 3/4"	13 1/8"	23"	585
Pier 6	4,5	2	G-1000(3)	-2.4	952	100.	1410.	25 1/2"	25"	19.09"	24"	1.61"	1.91"	2.21"	1.57"	6.65	8 5/8"	2.18"	3"	19 1/2"	31 7/8"	13 11/16"	24 1/8"	580
Pier 7	4,5	2	G-1100(5)	-2.8	1022	110.	1654.	25 3/8"	28 3/8"	20.16"	25 3/8"	1.65"	2.05"	2.45"	1.71"	7.12	9 3/16"	2.27"	5"	20 1/2"	33 1/4"	14 3/8"	25 1/2"	683
Pier 5 *	1,2,3	3	G-1100(2)	-1.2	1061	110.	1603.		25 3/8"			1.86"	2.01"	2.16"		7.08			2"					650
*	6	1		-1.4								1.83"		2.19"										
*	7	1		-1.5								1.82"		2.20"										
Pier 5 *	8	1	G-1100(2)	-1.6	1061	110.	1603"	25 3/8"	25 3/8"	20.16"	25 3/8"	1.81"	2.01"	2.21"	1.71"	7.08	9 3/16"	2.27	2"	20 1/2"	33 1/4"	14 3/8"	25 1/2"	650
Pier 4	4,5	2	G-1500(3)	-0.3	1420	150.	2472.	29 1/4"	30 1/4"	23.32"	29 1/4"	2.04"	2.09"	2.14"	1.95"	7.85	10 5/16"	2.65"	3"	23 15/16"	38 3/4"	16 3/8"	29 3/8"	970
Pier 3	4	1	G-1800(7)	+0.7	1715	180.	3272.	33"	37"	25.63"	32"	2.15"	2.28"	2.41"	2.08"	8.39	11 1/8	2.86	7"	26 15/16"	42 1/2"	18 1/4"	32 1/8"	1250
Pier 3	5	1	G-1800(7)	+0.6	1715	180.	3272.	33"	37"	25.63"	32"	2.17"	2.28"	2.39"	2.08"	8.39	11 1/8	2.86	7"	26 3/16"	42 1/2"	18 1/4"	32 1/8"	1250

† Bearing weight includes Masonry Pl.
* Top plate beveled in transverse direction. See Top Plate Detail "2". G

GENERAL NOTES:

1. All steel: A588 U.N.O.
2. Neoprene: A.A.S.H.T.O. 50 Durometer.
3. Stainless facing: 14 GA. A240-Type 304 mirror finish.
4. Rotation: .86° (.015 radians)
5. Movement: See plan.
6. Coating: Zinc metalized per AWS C2.2 with 8 mil external dry coat thickness & 2 mil internal thickness.
7. ⊗ Indicates thick edge of top plate.
8. Magnetic particle testing required for 10% of weld length.
9. Bearings to be shop assembled, match marked, and shipped as a unit.
10. Uplift restraints required for Pier 2-Span 3 bearings only. Refer to Dwg. D-1003-1A for details.
11. For parts details refer to Dwgs. D-1001-1B thru D-1001-1F.
12. Zinc metalize all surfaces as per Note 6 (unless noted on parts Dwgs. D-1001-1D,E,F) after completing all shop welding. Mask stainless steel & teflon to prevent over spray. A588 steel not metalized to recieve one coat boiled linseed oil or approved equal.

R95-153

Code: 6000

No.	Revision	Date
No. 4	Removed SMAW from 1/16 Weld	12-13-84
No. 3	Rev. Dim. ⑪ on G&N 1800 Brg	11-14-84
No. 2	Altered as per 10-11-84 approval	9-28-84 10-11-84
No. 1	Dimension Changes & Uplift Details	8-6-84

High Steel Structures, Inc.
1905 Old Philadelphia Pike
Lancaster, Pennsylvania 17603
Phone 717/299-5211
A Subsidiary of High Industries, Inc

State of Maine - Dept. of Transportation
I-395 Bridge over Penobscot River
Bangor - Brewer Penobscot County

Bearing Details by Bermag Corp. Int'l, Fairfield, N.J. Job # 1177-4

State Contract or Ref. No. 6 Contractor Cianbro Corp.

In Charge: Made By: M. Bujtas 5-25-84 Chk'd. By: [signature] Date: 6-26-84

Contract Number: ME-84088-1,2,3 Drawing Number: D-1001-1A

Bermag Corp Int'l · M. Bujtas AF 13531B
Polytrace 036

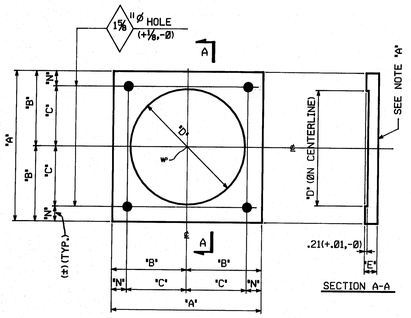

MASONRY PLATES

LOCATION	GIRDER	BRG. TYPE	'A'	'B'	'C'	'D'	'E'	'N'
PIER 2 SPAN 2	1,2,3,5,6,8,9,10	N-350(2)	1'-10⅝	11 5/16	9 1/16	1'-2⅞	1.46	2¼
	4,7	G-350(2)						
ABUT. 1	1,2,3,5,6,8,9,10	N-400(2)	1'-11½	11¾	9½	1'-3¾	1.50	2¼
ABUT. 2	1,2,3,6,7,8	N-400(7)						
ABUT. 1	4,7	G-400(2)						
ABUT. 2	4,5	G-400(7)						
PIER 1	4,7	F-900	2'-6¾	1'-3⅜	1'-1⅛	1'-11	2.08	2¼
	1,2,3,5,6,8,9,10	G-900(2)						
PIER 6	1,2,3,6,7,8	N-1000(3)	2'-7⅞	1'-3 15/16	1'-1 11/16	2'-0⅛	2.18	2¼
	4,5	G-1000(3)						
PIER 5	4,5	F-1100	2'-9¼	1'-4⅝	1'-2⅜	2'-1½	2.27	2¼
PIER 7	1,2,3,6,7,8	N-1100(5)						
	4,5	G-1100(5)						
PIER 5	1,2,3,6,7,8	G-1100(2)						
PIER 4	1,2,3,6,7,8	N-1500(3)	3'-2¾	1'-7⅜	1'-4⅜	2'-5⅜	2.65	3
	4,5	G-1500(3)						
PIER 3	1,2,3,6,7,8	N-1800(7)	3'-6½	1'-9¼	1'-6¼	2'-8⅛	2.86	3
	4,5	G-1800(7)						
DIMENSION TOLERANCES			+1/8,-0	+1/16,-0	+1/16,-1/16	+1/32,-0	+.06,-0	--

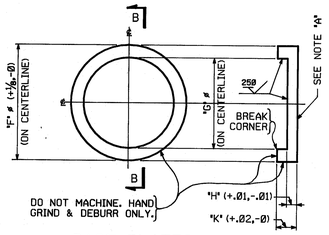

BASE PLATES

SECTION B-B

LOCATION	GIRDER	BRG. TYPE	'F'	'G'	'H'	'K'
PIER 2 SPAN 2	1,2,3,5,6,8,9,10	N-350(2)	1'-2¾	10.74 (+.008,-0)	1.00	2.49
	4,7	G-350(2)				
ABUT. 1	1,2,3,5,6,8,9,10	N-400(2)	1'-3⅝	11.89 (+.009,-0)	1.02	2.53
ABUT. 2	1,2,3,6,7,8	N-400(7)				
ABUT. 1	4,7	G-400(2)				
ABUT. 2	4,5	G-400(7)				
PIER 2 SPAN 3	1,2,3,6,7,8	N-600(9)	1'-6⅞	14.11 (+.010,-0)	1.20	2.93
	4,5	G-600(9)				
PIER 1	4,7	F-900	1'-10⅞	18.48 (+.010,-0)	1.50	3.70
	1,2,3,5,6,8,9,10	G-900(2)				
PIER 6	1,2,3,6,7,8	N-1000(3)	2'-0	19.09 (+.012,-0)	1.57	3.80
	4,5	G-1000(3)				
PIER 5	4,5	F-1100	2'-1⅜	20.16 (+.012,-0)	1.71	4.10
PIER 7	1,2,3,6,7,8	N-1100(5)				
	4,5	G-1100(5)				
PIER 5	1,2,3,6,7,8	G-1100(2)				
PIER 4	1,2,3,6,7,8	N-1500(3)	2'-5¼	23.32 (+.012,-0)	1.95	4.56
	4,5	G-1500(3)				
PIER 3	1,2,3,6,7,8	N-1800(7)	2'-8	25.63 (+.012,-0)	2.08	5.00
	4,5	G-1800(7)				

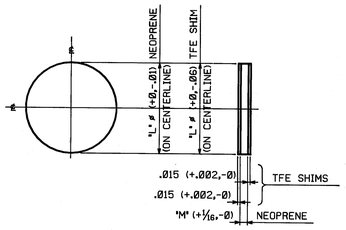

NEOPRENE AND TFE SHIMS

LOCATION	GIRDER	BRG. TYPE	"L"	"M"
PIER 2 SPAN 2	1,2,3,5,6,8,9,10	N-350(2)	10.74	¾
	4,7	G-350(2)		
ABUT. 1	1,2,3,5,6,8,9,10	N-400(2)	11.89	¾
ABUT. 2	1,2,3,6,7,8	N-400(7)		
ABUT. 1	4,7	G-400(2)		
ABUT. 2	4,5	G-400(7)		
PIER 2 SPAN 3	1,2,3,6,7,8	N-600(9)	14.11	1"
	4,5	G-600(9)		
PIER 1	4,7	F-900	18.48	1¼
	1,2,3,5,6,8,9,10	G-900(2)		
PIER 6	1,2,3,6,7,8	N-1000(3)	19.09	1¼
	4,5	G-1000(3)		
PIER 5	4,5	F-1100	20.16	1⅜
PIER 7	1,2,3,6,7,8	N-1100(5)		
	4,5	G-1100(5)		
PIER 5	1,2,3,6,7,8	G-1100(2)		
PIER 4	1,2,3,6,7,8	N-1500(3)	23.32	1½
	4,5	G-1500(3)		
PIER 3	1,2,3,6,7,8	N-1800(7)	25.63	1¾
	4,5	G-1800(7)		

FED.ROAD DIV.NO.	STATE	FED.AID PROJ.NO.
1	ME.	I-IG-395-8(82)176

BILL OF MATERIAL

REQUIRED PER SHIPMENT #1	#2	#3	NO.	BRG. TYPE #	DESCRIPTION	LENGTH		REMARKS	ITEM	SHIP. WEIGHT EA.
					MASONRY PLATES					
10	--	--	10	350	PL 22⅝ x 1.46	1	10⅝		1A/10	
10	--	8	18	400	PL 23½ x 1.50	1	11½		1A/9	
10	--	--	10	900	PL 38¾ x 2.08	2	6¾		1A/7	
--	--	8	8	1000	PL 31⅞ x 2.18	2	7⅞		1A/6	
--	--	16	16	1100	PL 33¼ x 2.27	2	9¼		1A/5	
--	8	--	8	1500	PL 38¾ x 2.65	3	2¾		1A/4	
--	8	--	8	1800	PL 42½ x 2.86	3	6½		1A/3	
					BASE PLATES					
10	--	--	10	350	PL 1'-2¾" x 2.49" THK.				1A/20	
10	--	8	18	400	PL 1'-3⅝" x 2.53" THK.				1A/19	
--	8	--	8	600	PL 1'-6⅞" x 2.93" THK.				1A/18	
10	--	--	10	900	PL 1'-10⅞" x 3.70" THK.				1A/17	
--	--	8	8	1000	PL 2'-0 " x 3.80" THK.				1A/16	
--	--	16	16	1100	PL 2'-1⅜" x 4.10" THK.				1A/15	
--	8	--	8	1500	PL 2'-5¼" x 4.56" THK.				1A/14	
--	8	--	8	1800	PL 2'-8 " x 5.00" THK.				1A/13	
					NEOPRENE					
10	--	--	10	350	10.74"# x ¾ " THK			AASHTO GRADE 50 DUROMETER	1D/10	
10	--	8	18	400	11.89"# x ¾ " THK.			AASHTO GRADE 50 DUROMETER	1D/9	
--	8	--	8	600	14.11"# x 1" THK.			AASHTO GRADE 50 DUROMETER	1D/8	
10	--	--	10	900	18.48"# x 1¼ THK.			AASHTO GRADE 50 DUROMETER	1D/7	
--	--	8	8	1000	19.09"# x 1¼ THK.			AASHTO GRADE 50 DUROMETER	1D/6	
--	--	16	16	1100	20.16"# x 1⅜ THK.			AASHTO GRADE 50 DUROMETER	1D/5	
--	8	--	8	1500	23.32"# x 1½ THK.			AASHTO GRADE 50 DUROMETER	1D/4	
--	8	--	8	1800	25.63"# x 1¾ THK.			AASHTO GRADE 50 DUROMETER	1D/3	
					TFE SHIMS					
20	--	--	20	350	10.74"# x .015" THK.			VIRGIN CHEMFLUOR T.F.E.	1D/21	
20	--	16	36	400	11.89"# x .015" THK.			VIRGIN CHEMFLUOR T.F.E.	1D/20	
--	16	--	16	600	14.11"# x .015" THK.			VIRGIN CHEMFLUOR T.F.E.	1D/19	
20	--	--	20	900	18.48"# x .015" THK.			VIRGIN CHEMFLUOR T.F.E.	1D/18	
--	--	16	16	1000	19.09"# x .015" THK.			VIRGIN CHEMFLUOR T.F.E.	1D/17	
--	--	32	32	1100	20.16"# x .015" THK.			VIRGIN CHEMFLUOR T.F.E.	1D/16	
--	16	--	16	1500	23.32"# x .015" THK.			VIRGIN CHEMFLUOR T.F.E.	1D/15	
--	16	--	16	1800	25.63"# x .015" THK.			VIRGIN CHEMFLUOR T.F.E.	1D/14	

NOTES:

NOTE 'A': SURFACES INDICATED ARE TO BE STRAIGHT AND TRUE; FINISH IF NECESSARY.

ALL DIMENSIONS GIVEN THUS: 1.46 ARE DECIMALS OF AN INCH.

FOR NOTES AND REFERENCE, SEE DRAWING D-1001-1A.

MATERIAL TO BE ASTM A588 (U.N.)

SHOP NOTE

HOLES: AS NOTED

BOLTS: NONE

R95-154

CODE:6000

No.	Revision	Date
2	REV. DIM. E AND MAS. PL OF 1800	11-14-84
1	REVISION DIMENSION CHANGE AS PER 10-11-84 REQUEST	9-28-84 10-11-84

HIGH STEEL STRUCTURES, INC.
1905 Old Philadelphia Pike
Lancaster, Pennsylvania 17603
Phone 717/299-523
A Subsidiary of High Industries, Inc.

POT BEARING DETAILS
I-395 BRIDGE OVER PENOBSCOT RIVER
I-395 BRIDGE STA. 164+60.00
PENOBSCOT COUNTY
STATE OF MAINE
DEPARTMENT OF TRANSPORTATION

STATE CONTRACT OR REF.NO. 6 CONTRACTOR CIANBRO CORP.

IN CHARGE: HINKLE MADE BY: B.J.K. CHK.D. BY: JCH DATE: 7-2-84

CONTRACT NUMBER: ME-84088-1,2,3 DRAWING NUMBER: D-1001-1B

FED.ROAD DIV.NO.	STATE	FED.AID PROJ.NO.
1	ME.	I-IG-395-8(82)176

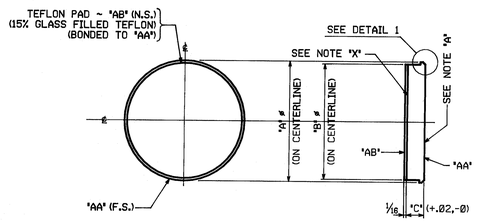

PISTONS - NON GUIDED

LOCATION	GIRDER	BRG. TYPE	'A' ⚠	'B' ⚠	'C'	'D'	'E'	'F'	'AA'	'AB'
PIER 2 SPAN 2	1,2,3,5, 6,8,9,10	N-350(2)	10.72 (+0,-.008)	10.58	1.33	.07	.13	.37	ba	bk
ABUT. 1	1,2,3,5, 6,8,9,10	N-400(2)	11.87 (+0,-.009)	11.71	1.36	.08	.13	.37	bb	bm
ABUT. 2	1,2,3, 6,7,8	N-400(7)	11.87 (+0,-.009)	11.71	1.36	.08	.13	.37	bb	bm
PIER 2 SPAN 3	1,2,3, 6,7,8	N-600(9)	14.07 (+0,-.010)	13.91	1.46	.08	.14	.37	bc	bn
PIER 6	1,2,3, 6,7,8	N-1000(3)	19.04 (+0,-.012)	18.84	1.77	.10	.18	.50	bd	bp
PIER 7	1,2,3, 6,7,8	N-1100(5)	20.11 (+0,-.012)	19.91	1.83	.10	.21	.50	bf	bs
PIER 4	1,2,3, 6,7,8	N-1500(3)	23.27 (+0,-.012)	23.05	2.04	.11	.24	.56	bg	bt
PIER 3	1,2,3, 6,7,8	N-1800(7)	25.58 (+0,-.012)	25.36	2.14	.11	.27	.56	bh	bw

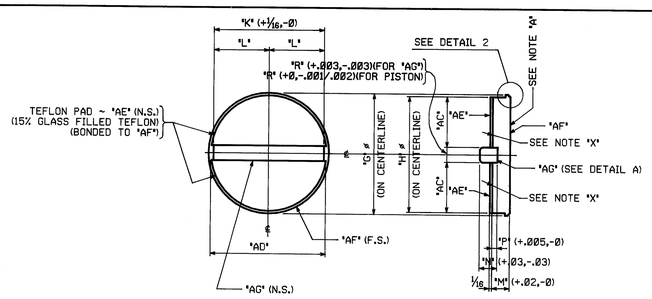

PISTONS - GUIDED

LOCATION	GIRDER	BRG. TYPE	'G' ⚠	'H' ⚠	'K' ⚠	'L' ⚠	'M'	'N'	'P'	'R'	'S'	'T'	'U'	'AC' ⚠	'AD' ⚠	'AE'	'AF'	'AG'
PIER 2 SPAN 2	4,7	G-350(2)	10.72 (+0,-.008)	10.58	10 1/16	5 1/32	1.33	1'	.37	.500	.07	.13	.37	5.04	10.5682	by	bak	bba
ABUT. 1	4,7	G-400(2)	11.87 (+0,-.009)	11.71	11 1/8	5 9/16	1.36	1'	.37	.500	.08	.13	.37	5.605	11.6993	baa	bam	bbb
ABUT. 2	4,5	G-400(7)	11.87 (+0,-.009)	11.71	11 1/8	5 9/16	1.36	1'	.37	.500	.08	.13	.37	5.605	11.6993	baa	bam	bbb
PIER 2 SPAN 3	4,5	G-600(9)	14.07 (+0,-.010)	13.91	1'-1 5/16	6 21/32	1.46	1 1/4	.45	.750	.08	.14	.37	6.58	13.8898	bab	ban	bbc
PIER 1	1,2,3,5, 6,8,9,10	G-900(2)	18.43 (+0,-.010)	18.25	1'-5 7/8	8 13/16	1.73	1 1/4	.45	.750	.09	.17	.50	8.75	18.2346	bac	bap	bbd
PIER 6	4,5	G-1000(3)	19.04 (+0,-.012)	18.84	1'-6 1/4	9 1/8	1.77	1 1/4	.45	.750	.10	.18	.50	9.045	18.8251	bad	bas	bbf
PIER 7	4,5	G-1100(5)	20.11 (+0,-.012)	19.91	1'-7 3/16	9 13/32	1.83	1 1/2	.55	1.000	.10	.21	.50	9.455	19.8849	baf	bat	bbg
PIER 5	1,2,3, 6,7,8	G-1100(2)	20.11 (+0,-.012)	19.91	1'-7 3/16	9 13/32	1.83	1 1/2	.55	1.000	.10	.21	.50	9.455	19.8849	baf	bat	bbg
PIER 4	4,5	G-1500(3)	23.27 (+0,-.012)	23.05	1'-10 7/16	11 7/32	2.04	1 1/2	.55	1.000	.11	.24	.56	11.025	23.0283	bag	baw	bbh
PIER 3	4,5	G-1800(7)	25.58 (+0,-.012)	25.36	2'-0 3/4	1'-0 3/8	2.14	1 3/4	.68	1.000	.11	.27	.56	12.18	25.3403	bah	bay	bbk

REQUIRED PER SHIPMENT #1	#2	#3	NO.	BRG. TYPE *	DESCRIPTION	LENGTH	REMARKS	ITEM	SHP. WEIGHT EA.
					BRASS SEALING RINGS				
10	--	--	10	350	ROD 5/16"ø	2 8 3/4	HALF-HARD BRASS ROD PER QQB626 COMP. 22	1C 31	
10	--	8	18	400	ROD 5/16"ø	3 0 3/8	HALF-HARD BRASS ROD PER QQB626 COMP. 22	1C 30	
--	8	--	8	600	ROD 5/16"ø	3 7 3/8	HALF-HARD BRASS ROD PER QQB626 COMP. 22	1C 29	
10	--	--	10	900	ROD 3/8"ø	4 8 7/8	HALF-HARD BRASS ROD PER QQB626 COMP. 22	1C 28	
--	--	8	8	1000	ROD 3/8"ø	4 10 13/16	HALF-HARD BRASS ROD PER QQB626 COMP. 22	1C 27	
--	--	16	16	1100	ROD 3/8"ø	5 2 3/16	HALF-HARD BRASS ROD PER QQB626 COMP. 22	1C 26	
--	8	--	8	1500	ROD 1/2"ø	5 11 11/16	HALF-HARD BRASS ROD PER QQB626 COMP. 22	1C 25	
--	8	--	8	1800	ROD 1/2"ø	6 6 15/16	HALF-HARD BRASS ROD PER QQB626 COMP. 22	1C 24	

⚠

REQUIRED PER SHIPMENT #1	#2	#3	NO.	MARK	DESCRIPTION	LENGTH	REMARKS	ITEM	SHP. WEIGHT EA.
					PISTONS-NON-GUIDED				
8	--	--	8	ba	℞ 10.72"ø x 1.33" THK.		FOR BRG. TYPE 350	1A 30	
8	--	6	14	bb	℞ 11.87"ø x 1.36" THK.		FOR BRG. TYPE 400	1A 29	
--	6	--	6	bc	℞ 14.07"ø x 1.46" THK.		FOR BRG. TYPE 600	1A 28	
--	--	6	6	bd	℞ 19.04"ø x 1.77" THK.		FOR BRG. TYPE 1000	1A 26	
--	--	6	6	bf	℞ 20.11"ø x 1.83" THK.		FOR BRG. TYPE 1100	1A 25	
--	6	--	6	bg	℞ 23.27"ø x 2.04" THK.		FOR BRG. TYPE 1500	1A 24	
--	6	--	6	bh	℞ 25.58"ø x 2.14" THK.		FOR BRG. TYPE 1800	1A 23	
8	--	--	8	bk	PAD 10.58"ø x 7/16" THK.		15%GLASS FILL.TEFLON FOR BRG. TYPE 350	1E 9	
8	--	6	14	bm	PAD 11.71"ø x 7/16" THK.		15%GLASS FILL.TEFLON FOR BRG. TYPE 400	1E 8	
--	6	--	6	bn	PAD 13.91"ø x 7/16" THK.		15%GLASS FILL.TEFLON FOR BRG. TYPE 600	1E 7	
--	--	6	6	bp	PAD 18.84"ø x 7/16" THK.		15%GLASS FILL.TEFLON FOR BRG. TYPE 1000	1E 6	
--	--	6	6	bs	PAD 19.91"ø x 7/16" THK.		15%GLASS FILL.TEFLON FOR BRG. TYPE 1100	1E 5	
--	6	--	6	bt	PAD 23.05"ø x 7/16" THK.		15%GLASS FILL.TEFLON FOR BRG. TYPE 1500	1E 4	
--	6	--	6	bw	PAD 25.36"ø x 7/16" THK.		15%GLASS FILL.TEFLON FOR BRG. TYPE 1800	1E 3	
					PISTONS-GUIDED				
2	--	--	2	bak	℞ 10.72"ø x 1.33" THK.		FOR BRG. TYPE 350	1A 30	
2	--	2	4	bam	℞ 11.87"ø x 1.36" THK.		FOR BRG. TYPE 400	1A 29	
--	2	--	2	ban	℞ 14.07"ø x 1.46" THK.		FOR BRG. TYPE 600	1A 28	
8	--	--	8	bap	℞ 18.43"ø x 1.73" THK.		FOR BRG. TYPE 900	1A 27	
--	--	2	2	bas	℞ 19.04"ø x 1.77" THK.		FOR BRG. TYPE 1000	1A 26	
--	--	8	8	bat	℞ 20.11"ø x 1.83" THK.		FOR BRG. TYPE 1100	1A 25	
--	2	--	2	baw	℞ 23.27"ø x 2.04" THK.		FOR BRG. TYPE 1500	1A 24	
--	2	--	2	bay	℞ 25.58"ø x 2.14" THK.		FOR BRG. TYPE 1800	1A 23	
2	--	--	2	bba	BAR 1" x .5	0 10 1/16	FOR BRG. TYPE 350 COLD DRAWN (C1018)	1B 10	
2	--	2	4	bbb	BAR 1" x .5	0 11 1/8	FOR BRG. TYPE 400 COLD DRAWN (C1018)	1B 9	
--	2	--	2	bbc	BAR 1 1/4 x .75	1 5 5/16	FOR BRG. TYPE 600 COLD DRAWN (C1018)	1B 8	
8	--	--	8	bbd	BAR 1 1/4 x .75	1 5 5/8	FOR BRG. TYPE 900 COLD DRAWN (C1018)	1B 7	
--	--	2	2	bbf	BAR 1 1/4 x .75	1 6 1/4	FOR BRG. TYPE 1000 COLD DRAWN (C1018)	1B 6	
--	--	8	8	bbg	BAR 1 1/2 x 1"	1 7 3/16	FOR BRG. TYPE 1100 COLD DRAWN (C1018)	1B 5	
--	2	--	2	bbh	BAR 1 1/2 x 1"	1 10 7/16	FOR BRG. TYPE 1500 COLD DRAWN (C1018)	1B 4	
--	2	--	2	bbk	BAR 1 3/4 x 1"	2 0 3/4	FOR BRG. TYPE 1800 COLD DRAWN (C1018)	1B 3	
4	--	--	4	by	PAD 5.040x1/16x10.5682		15%GLASS FILL. TEFLON FOR BRG. TYPE 350	1E 18	
4	--	4	8	baa	PAD 5.605x1/16x11.6993		15%GLASS FILL. TEFLON FOR BRG. TYPE 400	1E 17	
--	4	--	4	bab	PAD 6.580x1/16x13.8898		15%GLASS FILL. TEFLON FOR BRG. TYPE 600	1E 16	
16	--	--	16	bac	PAD 8.75x1/16x18.2346		15%GLASS FILL. TEFLON FOR BRG. TYPE 900	1E 15	
--	--	4	4	bad	PAD 9.045x1/16x18.8251		15%GLASS FILL. TEFLON FOR BRG. TYPE 1000	1E 14	
--	--	16	16	baf	PAD 9.455x1/16x19.8849		15%GLASS FILL. TEFLON FOR BRG. TYPE 1100	1E 13	
--	4	--	4	bag	PAD 11.025x1/16x23.0283		15%GLASS FILL.TEFLON FOR BRG. TYPE 1500	1E 12	
--	4	--	4	bah	PAD 12.18x1/16x25.3403		15%GLASS FILL. TEFLON FOR BRG. TYPE 1800	1E 11	

⚠

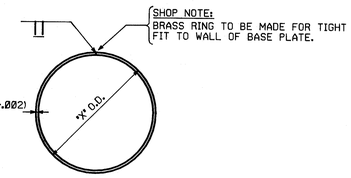

BRASS SEALING RINGS

LOCATION	GIRDER	BRG. TYPE	'X' ⚠	'Y'
PIER 2 SPAN 2	1,2,3,5, 6,8,9,10	N-350(2)	10.74	5/16
	4,7	G-350(2)	10.74	5/16
ABUT. 1	1,2,3,5, 6,8,9,10	N-400(2)	11.89	5/16
ABUT. 2	1,2,3, 6,7,8	N-400(7)	11.89	5/16
ABUT. 1	4,7	G-400(2)	11.89	5/16
ABUT. 2	4,5	G-400(7)	11.89	5/16
PIER 2 SPAN 3	1,2,3, 6,7,8	N-600(9)	14.11	5/16
	4,5	G-600(9)	14.11	5/16
PIER 1	4,7	F-900	18.48	3/8
	1,2,3,5, 6,8,9,10	G-900(2)	18.48	3/8
PIER 6	1,2,3, 6,7,8	N-1000(3)	19.09	3/8
	4,5	G-1000(3)	19.09	3/8
PIER 5	4,5	F-1100	20.16	3/8
PIER 7	1,2,3, 6,7,8	N-1100(5)	20.16	3/8
	4,5	G-1100(5)	20.16	3/8
PIER 5	1,2,3, 6,7,8	G-1100(2)	20.16	3/8
PIER 4	1,2,3, 6,7,8	N-1500(3)	23.32	1/2
	4,5	G-1500(3)	23.32	1/2
PIER 3	1,2,3, 6,7,8	N-1800(7)	25.63	1/2
	4,5	G-1800(7)	25.63	1/2

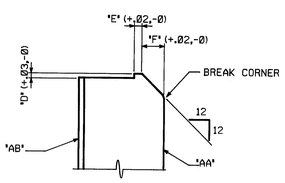

ENLARGED DETAIL 1

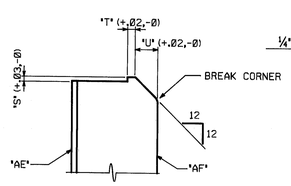

ENLARGED DETAIL 2

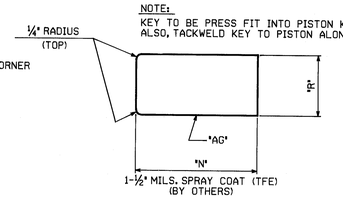

ENLARGED DETAIL A

NOTE:
KEY TO BE PRESS FIT INTO PISTON KEYWAY.
ALSO, TACKWELD KEY TO PISTON ALONG ENDS AFTER ASSEMBLY.

NOTES:

NOTE 'A': SURFACES INDICATED ARE TO BE STRAIGHT AND TRUE; FINISH IF NECESSARY.

NOTE 'X': SURFACES INDICATED ARE TO BE MACHINED FLAT TO .01"/FT.(.04" MAXIMUM)

ALL DIMENSIONS GIVEN THUS: 12.21 ARE DECIMALS OF AN INCH.
FOR NOTES AND REFERENCE, SEE DRAWING D-1001-1A.
MATERIAL TO BE ASTM A588 (U.N.)

SHOP NOTE

HOLES: NONE
BOLTS: NONE

R95-155

CODE:6000

NO. ⚠	REVISION	DATE
	DIMENSION CHANGE AS PER 10-11-84 REQUEST	9-28-84 & 10-17-84

HIGH STEEL STRUCTURES, INC.
1905 Old Philadelphia Pike
Lancaster, Pennsylvania 17603
Phone 717/299-521
A Subsidiary of High Industries, Inc.

POT BEARING DETAILS
I-395 BRIDGE OVER PENOBSCOT RIVER
I-395 BRIDGE STA. 164+60.00
PENOBSCOT COUNTY
STATE OF MAINE
DEPARTMENT OF TRANSPORTATION

STATE CONTRACT OR REF.NO. 6 CONTRACTOR CIANBRO CORP.
IN CHARGE: HINKLE MADE BY: B.J.K. CHK.D. BY: JCH DATE: 7-2-84
CONTRACT NUMBER: ME-84088-1,2,3 DRAWING NUMBER: D-1001-1C

FED.ROAD DIV.NO.	STATE	FED.AID PROJ.NO.
1	ME.	I-IG-395-8(821)176

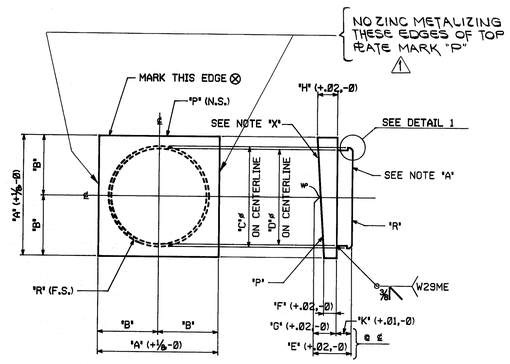

SOLE PLATE/PISTON PLATE - FIXED

LOCATION	GIRDER	BRG. TYPE	'A'	'B'	'C'	'D'	'E'	'F'	'G'	'H'	'K'	'M'	'P'	'R'
PIER 1	4	F-900	1'-10⅞	11 7/16	18.43 (+0,-.010)	18.23	2.95	.97	1.22	1.47	1.73	.17	bbm	bbs
	7	F-900	1'-10⅞	11 7/16	18.43 (+0,-.010)	18.23	2.95	.95	1.22	1.49	1.73	.17	bbn	bbs
PIER 5	4,5	F1100	2'-1⅜	1'-0 11/16	20.11 (+0,-.012)	19.91	3.05	1.04	1.22	1.40	1.83	.21	bbp	bbt

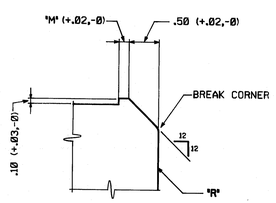

ENLARGED DETAIL 1

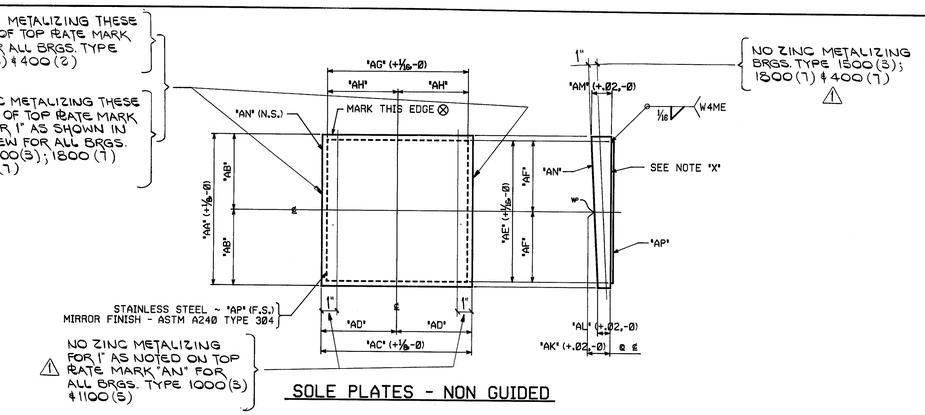

SOLE PLATES - NON GUIDED

LOCATION	GIRDER	BRG. TYPE	'AA'	'AB'	'AC'	'AD'	'AE'	'AF'	'AG'	'AH'	'AK'	'AL'	'AM'	'AN'	'AP'
PIER 2 SPAN 2	1	N-350(2)	1'-3¾	7⅞	1'-2¾	7⅜	1'-3¼	7⅝	1'-2¼	7⅛	1.25	1.04	1.46	bbw	bdw
	2	N-350(2)	↑	↑	↑	↑	↑	↑	↑	↑	↑	1.05	1.45	bby	↑
	3,6	N-350(2)	↓	↓	↓	↓	↓	↓	↓	↓	↓	1.07	1.43	bca	↓
	5,8,9,10	N-350(2)	1'-3¾	7⅞	1'-2¾	7⅜	1'-3¼	7⅝	1'-2¼	7⅛	1.25	1.08	1.42	bcb	bdw
ABUT. 1	1	N-400(2)	1'-4⅝	8 9/16	1'-3⅝	7 13/16	1'-4⅛	8 1/16	1'-3⅛	7 3/16	1.23	1.00	1.46	bcc	bdy
	3,5	N-400(2)	↑	↑	↑	↑	↑	↑	↑	↑	↑	1.03	1.43	bcd	↑
	6	N-400(2)	↓	↓	↓	↓	↓	↓	↓	↓	↓	1.04	1.42	bcf	↓
	2,8,9,10	N-400(2)	1'-4⅝	8 9/16	1'-3⅝	7 13/16	1'-4⅛	8 1/16			1.23	1.01	1.45	bcg	bdy
ABUT. 2	1	N-400(7)	1'-9⅝	10 13/16	1'-4¼	8⅛	1'-9⅛	10 3/16	↓	↓	1.66	1.36	1.96	bch	bfa
	2,3,6,7,8	N-400(7)	1'-9⅝	10 13/16	1'-4¼	8⅛	1'-9⅛	10 3/16	1'-3⅛	7 3/16	1.66	1.35	1.97	bck	bfa
PIER 6	1,2,3, 6,7,8	N-1000(3)	2'-1	1'-0½	2'-1½	1'-0¾	2'-0½	1'-0¼	1'-11½	11¾	1.91	1.61	2.21	bcy	bfc
PIER 7	1,2,3,6	N-1100(5)	2'-4⅜	1'-2 7/16	2'-1⅜	1'-0 11/16	2'-3⅞	1'-1 15/16	2'-0⅞	1'-0 7/16	2.05	1.65	2.45	bda	bfd
	7,8	N-1100(5)	2'-4⅜	1'-2 7/16	2'-1⅜	1'-0 11/16	2'-3⅞	1'-1 15/16	2'-0⅞	1'-0 7/16	2.05	1.64	2.46	bdb	bfd
PIER 4	1	N-1500(3)	2'-6¼	1'-3⅛	2'-5¼	1'-2⅝	2'-5¾	1'-2⅞	2'-4¾	1'-2⅜	2.09	2.07	2.11	bdc	bff
	2,3	N-1500(3)	↑	↑	↑	↑	↑	↑	↑	↑	↑	2.09	2.09	bdd	↑
	6	N-1500(3)	↓	↓	↓	↓	↓	↓	↓	↓	↓	2.03	2.15	bdf	↓
	7	N-1500(3)										2.00	2.18	bdg	
	8	N-1500(3)	2'-6¼	1'-3⅛	2'-5¼	1'-2⅝	2'-5¾	1'-2⅞	2'-4¾	1'-2⅜	2.09	1.97	2.21	bdh	bff
PIER 3	1	N-1800(7)	3'-1	1'-6½	2'-9	1'-4½	3'-0½	1'-6¼	2'-7½	1'-3¾	2.28	2.11	2.45	bdk	bfg
	2	N-1800(7)	↑	↑	↑	↑	↑	↑	↑	↑	↑	2.13	2.43	bdm	↑
	3	N-1800(7)										2.15	2.41	bdn	
	6	N-1800(7)										2.19	2.37	bdp	
	7	N-1800(7)	↓	↓	↓	↓	↓	↓	↓	↓	↓	2.21	2.35	bds	↓
	8	N-1800(7)	3'-1	1'-6½	2'-9	1'-4½	3'-0½	1'-6¼	2'-7½	1'-3¾	2.28	2.22	2.34	bdt	bfg

BILL OF MATERIAL

REQUIRED PER SHIPMENT #1	#2	#3	NO.	MARK	DESCRIPTION	LENGTH		REMARKS	ITEM	SHOP WEIGHT EA.
					SOLE PLATE/PISTON PLATE - FIXED					
1	--	--	1	bbm	PL 22⅞x(1.47x.97)	1	10⅞	FOR BRG. TYPE 900	1B 24	
1	--	--	1	bbn	PL 22⅞x(1.49x.95)	1	10⅞	FOR BRG. TYPE 900	1B 24	
--	--	2	2	bbp	PL 25⅝x(1.40x1.04)	2	1⅜	FOR BRG. TYPE 1100	1B 27	
2	--	--	2	bbs	PL 18.43 "F" x 1.73 THK.			FOR BRG. TYPE 900	1A 27	
--	--	2	2	bbt	PL 20.11 "F" x 1.83 THK.			FOR BRG. TYPE 1100	1A 25	
					SOLE PLATES - NON GUIDED					
1	--	--	1	bbw	PL 14¾x(1.46x1.04)	1	3¾	FOR BRG. TYPE 350	1B 26	
1	--	--	1	bby	PL 14¾x(1.45x1.05)	1	3¾	FOR BRG. TYPE 350	1B 26	
2	--	--	2	bca	PL 14¾x(1.43x1.07)	1	3¾	FOR BRG. TYPE 350	1B 26	
4	--	--	4	bcb	PL 14¾x(1.42x1.08)	1	3¾	FOR BRG. TYPE 350	1B 26	
1	--	--	1	bcc	PL 15⅝x(1.46x1.00)	1	4⅝	FOR BRG. TYPE 400	1B 25	
2	--	--	2	bcd	PL 15⅝x(1.43x1.03)	1	4⅝	FOR BRG. TYPE 400	1B 25	
1	--	--	1	bcf	15⅝x(1.42x1.04)	1	4⅝	FOR BRG. TYPE 400	1B 25	
4	--	--	4	bcg	PL 15⅝x(1.45x1.01)	1	4⅝	FOR BRG. TYPE 400	1B 25	
--	--	1	1	bch	PL 16⅛x(1.96x1.36)	1	9⅝	FOR BRG. TYPE 400	1B 23	
--	--	5	5	bck	PL 16⅛x(1.97x1.35)	1	9⅝	FOR BRG. TYPE 400	1B 23	
--	--	6	6	bcy	PL 25½x(2.21x1.61)	2	1	FOR BRG. TYPE 1000	1B 18	
--	--	4	4	bda	PL 25⅜x(2.45x1.65)	2	4⅜	FOR BRG. TYPE 1100	1B 14	
--	--	2	2	bdb	PL 25⅜x(2.46x1.64)	2	4⅜	FOR BRG. TYPE 1100	1B 14	
--	1	--	1	bdc	PL 29¼x(2.11x2.07)	2	6¼	FOR BRG. TYPE 1500	1B 21	
--	2	--	2	bdd	PL 29¼x(2.09x2.09)	2	6¼	FOR BRG. TYPE 1500	1B 21	
--	1	--	1	bdf	PL 29¼x(2.15x2.03)	2	6¼	FOR BRG. TYPE 1500	1B 21	
--	1	--	1	bdg	PL 29¼x(2.18x2.00)	2	6¼	FOR BRG. TYPE 1500	1B 16	
--	1	--	1	bdh	PL 29¼x(2.21x1.97)	2	6¼	FOR BRG. TYPE 1500	1B 16	
--	1	--	1	bdk	PL 33x(2.45x2.11)	3	1	FOR BRG. TYPE 1800	1B 13	
--	1	--	1	bdm	PL 33x(2.43x2.13)	3	1	FOR BRG. TYPE 1800	1B 13	
--	1	--	1	bdn	PL 33x(2.41x2.15)	3	1	FOR BRG. TYPE 1800	1B 13	
--	1	--	1	bdp	PL 33x(2.37x2.19)	3	1	FOR BRG. TYPE 1800	1B 15	
--	1	--	1	bds	PL 33x(2.35x2.21)	3	1	FOR BRG. TYPE 1800	1B 15	
--	1	--	1	bdt	PL 33x(2.34x2.22)	3	1	FOR BRG. TYPE 1800	1B 15	
8	--	--	8	bdw	PL 14¼ x 14GA.	1	3¼	A240 TYPE 304 FOR BRG.TYPE 350	1C 12	
8	--	--	8	bdy	PL 15⅛ x 14GA.	1	4⅛	A240 TYPE 304 FOR BRG. TYPE 400	1C 10	
--	--	6	6	bfa	PL 15⅛ x 14GA.	1	9⅛	A240 TYPE 304 FOR BRG. TYPE 400	1C 9	
--	--	6	6	bfc	PL 23½ x 14GA.	2	0½	A240 TYPE 304 FOR BRG. TYPE 1000	1C 6	
--	--	6	6	bfd	PL 24⅞ x 14GA.	2	3⅞	A240 TYPE 304 FOR BRG. TYPE 1100	1C 5	
--	6	--	6	bff	PL 28¾ x 14GA.	2	5¾	A240 TYPE 304 FOR BRG. TYPE 1500	1C 4	
--	6	--	6	bfg	PL 31½ x 14GA.	3	0½	A240 TYPE 304 FOR BRG. TYPE 1800	1C 3	

NOTES:

NOTE 'A': SURFACES INDICATED ARE TO BE STRAIGHT AND TRUE; FINISH IF NECESSARY.

NOTE 'X': SURFACES INDICATED ARE TO BE MACHINED FLAT TO .01"/FT.(.04" MAXIMUM)

ALL DIMENSIONS GIVEN THUS: 2.95 ARE DECIMALS OF AN INCH.
FOR NOTES AND REFERENCE, SEE DRAWING D-1001-1A.
MATERIAL TO BE ASTM A588 (U.N.)

SHOP NOTE

HOLES: NONE
BOLTS: NONE

R95-156

CODE:6000

NO.	REVISION	DATE
1	altered as per 10-11-84 appv'l.	9-28-84 10-17-84

HIGH STEEL STRUCTURES, INC.
1905 Old Philadelphia Pike
Lancaster, Pennsylvania 17603
Phone 717/299-5121
A Subsidiary of High Industries, Inc.

POT BEARING DETAILS
I-395 BRIDGE OVER PENOBSCOT RIVER
I-395 BRIDGE STA. 164+60.00
PENOBSCOT COUNTY
STATE OF MAINE
DEPARTMENT OF TRANSPORTATION

STATE CONTRACT OR REF.NO. 6 CONTRACTOR CIANBRO CORP.
IN CHARGE: HINKLE MADE BY: B.J.K. DATE: 8-16-84 CHK.D. BY: JCH DATE: 7-2-84
CONTRACT NUMBER: ME-84088-1,2,3 DRAWING NUMBER: D-1001-1D

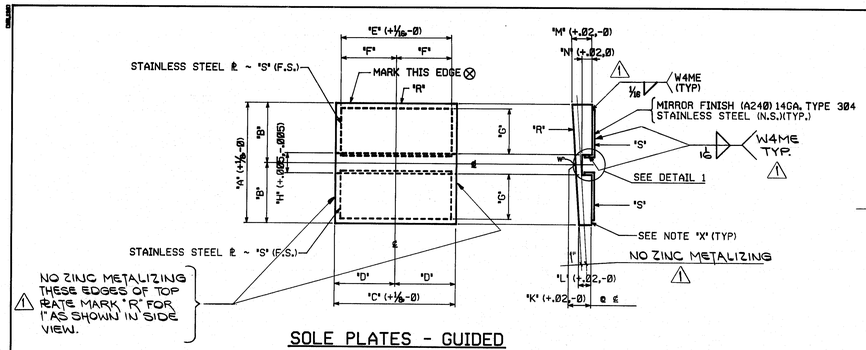

SOLE PLATES - GUIDED

LOCATION	GIRDER	BRG. TYPE	"A"	"B"	"C"	"D"	"E"	"F"	"G"	"H"	"K"	"L"	"M"	"N"	"P"	"R"	"S"
PIER 1	1	G-900(2)	1'-10⅞	11 7/16	1'-11	11½	1'-10½	11¼	10¾	1.06	1.90	1.59	2.21	.75	⅝	bgb	bhc
	2	G-900(2)	↑	↑	↑	↑	↑	↑	↑	↑	↑	1.60	2.20	↑	↑	bgc	↑
	3,8,9,10	G-900(2)	↓	↓	↓	↓	↓	↓	↓	↓	↓	1.63	2.17	↓	↓	bgd	↓
	5,6	G-900(2)	1'-10⅞	11 7/16	1'-11	11½	1'-10½	11¼	10¾	1.06	1.90	1.61	2.19	.75	⅝	bgf	bhc
PIER 5	1,2,3	G-1100(2)	2'-1⅜	1'-0 11/16	2'-1⅜	1'-0 11/16	2'-0⅞	1'-0 7/16	11 13/16	1.31	2.01	1.86	2.16	.93	13/16	bgg	bhd
	6	G-1100(2)	↑	↑	↑	↑	↑	↑	↑	↑	↑	1.83	2.19	↑	↑	bgh	↑
	7	G-1100(2)	↓	↓	↓	↓	↓	↓	↓	↓	↓	1.82	2.20	↓	↓	bgk	↓
	8	G-1100(2)	2'-1⅜	1'-0 11/16	2'-1⅜	1'-0 11/16	2'-0⅞	1'-0 7/16	11 13/16	1.31	2.01	1.81	2.21	.93	13/16	bgm	bhd

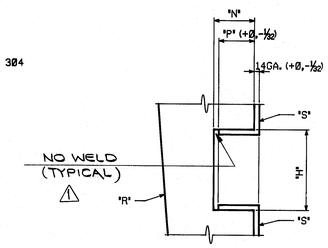

ENLARGED DETAIL 1

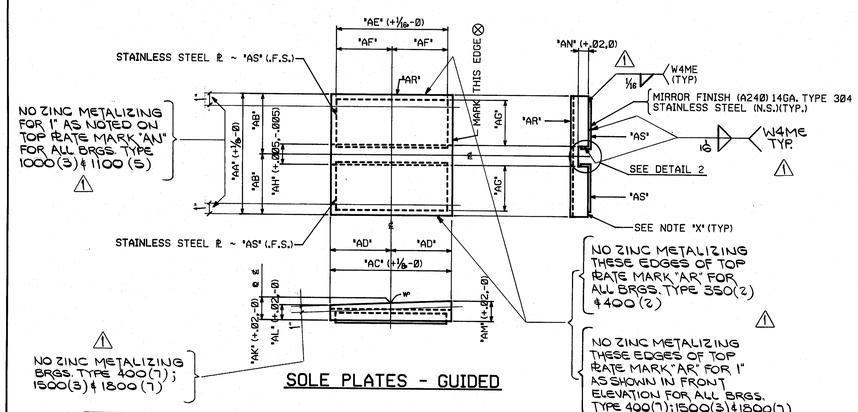

SOLE PLATES - GUIDED

LOCATION	GIRDER	BRG. TYPE	"AA"	"AB"	"AC"	"AD"	"AE"	"AF"	"AG"	"AH"	"AK"	"AL"	"AM"	"AN"	"AP"	"AR"	"AS"
PIER 2 SPAN 2	4,7	G-350(2)	1'-2¾	7⅜	1'-3¾	7⅞	1'-3¼	7⅝	6 15/16	.81	1.25	1.07	1.43	.56	7/16	bfh	bgn
ABUT. 1	4	G-400(2)	1'-3⅝	7 11/16	1'-4⅝	8 5/16	1'-4⅛	8 1/16	7 3/16	.81	1.23	1.05	1.41	.56	7/16	bfk	bgp
	7	G-400(2)	1'-3⅝	7 11/16	1'-4⅝	8 5/16	1'-4⅛	8 1/16	7 3/16	.81	1.23	1.02	1.44	.56	7/16	bfm	bgp
ABUT. 2	4,5	G-400(7)	1'-4¼	8⅛	1'-9⅝	10 15/16	1'-9⅛	10 7/16	7 3/16	.81	1.66	1.35	1.97	.56	7/16	bfn	bgs
PIER 6	4,5	G-1000(3)	2'-1½	1'-0¾	2'-1	1'-0½	2'-0½	1'-0¼	11¼	1.06	1.91	1.61	2.21	.75	⅝	bfs	bgw
PIER 7	4,5	G-1100(5)	2'-1⅜	1'-0 11/16	2'-4⅜	1'-2 9/16	2'-3⅞	1'-1 15/16	11 13/16	1.31	2.05	1.65	2.45	.93	13/16	bft	bgy
PIER 4	4,5	G-1500(3)	2'-5¼	1'-2⅝	2'-6¼	1'-3 1/16	2'-5¾	1'-2⅞	1'-1 15/16	1.31	2.09	2.04	2.14	.93	13/16	bfw	bha
PIER 3	4	G-1800(7)	2'-9	1'-4½	3'-1	1'-6½	3'-0½	1'-6¼	1'-3 5/16	1.31	2.28	2.15	2.41	.93	15/16	bfy	bhb
	5	G-1800(7)	2'-9	1'-4½	3'-1	1'-6½	3'-0½	1'-6¼	1'-3 5/16	1.31	2.28	2.17	2.39	.93	15/16	bga	bhb

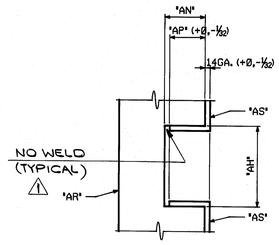

ENLARGED DETAIL 2

FED.ROAD DIV.NO.	STATE	FED.AID PROJ.NO.
1	ME.	I-IG-395-8(82)1176

BILL OF MATERIAL

REQUIRED PER SHIPMENT #1	#2	#3	NO.	MARK	DESCRIPTION	LENGTH		REMARKS	ITEM	SHIP. WEIGHT EA.
					SOLE PLATES - GUIDED					
2	--	--	2	bfh	PL 14¾ x (1.43 x 1.07)	1	3¾	FOR BRG. TYPE 350	1B/26	
1	--	--	1	bfk	PL 15⅝ x (1.41 x 1.05)	1	4⅝	FOR BRG. TYPE 400	1B/25	
1	--	--	1	bfm	PL 15⅝ x (1.44 x 1.02)	1	4⅝	FOR BRG. TYPE 400	1B/25	
--	--	2	2	bfn	PL 16¼ x (1.97 x 1.35)	1	9⅝	FOR BRG. TYPE 400	1B/23	
--	--	2	2	bfs	PL 25½ x (2.21 x 1.61)	2	1	FOR BRG. TYPE 1000	1B/18	
--	--	2	2	bft	PL 25⅜ x (2.45 x 1.65)	2	4⅜	FOR BRG. TYPE 1100	1B/14	
--	2	--	2	bfw	PL 29¼ x (2.14 x 2.04)	2	6¼	FOR BRG. TYPE 1500	1B/21	
--	1	--	1	bfy	PL 33 x (2.41 x 2.15)	3	1	FOR BRG. TYPE 1800	1B/13	
--	1	--	1	bga	PL 33 x (2.39 x 2.17)	3	1	FOR BRG. TYPE 1800	1B/13	
1	--	--	1	bgb	PL 22⅞ x (2.21 x 1.59)	1	11	FOR BRG. TYPE 900	1B/19	
1	--	--	1	bgc	PL 22⅞ x (2.20 x 1.60)	1	11	FOR BRG. TYPE 900	1B/19	
4	--	--	4	bgd	PL 22⅞ x (2.17 x 1.63)	1	11	FOR BRG. TYPE 900	1B/19	
2	--	--	2	bgf	PL 22⅞ x (2.19 x 1.61)	1	11	FOR BRG. TYPE 900	1B/19	
--	--	3	3	bgg	PL 25⅜ x (2.16 x 1.86)	2	1⅜	FOR BRG. TYPE 1100	1B/17	
--	--	1	1	bgh	PL 25⅜ x (2.19 x 1.83)	2	1⅜	FOR BRG. TYPE 1100	1B/17	
--	--	1	1	bgk	PL 25⅜ x (2.20 x 1.82)	2	1⅜	FOR BRG. TYPE 1100	1B/17	
--	--	1	1	bgm	PL 25⅜ x (2.21 x 1.81)	2	1⅜	FOR BRG. TYPE 1100	1B/17	
4	--	--	4	bgn	PL 7 5/16 x 14GA.	1	3¼	A240 TYPE 304 FOR BRG TYPE 350	1C/20	
4	--	--	4	bgp	PL 7 5/16 x 14GA.	1	4⅛	A240 TYPE 304 FOR BRG TYPE 400	1C/19	
--	--	4	4	bgs	PL 7 5/16 x 14GA.	1	9⅛	A240 TYPE 304 FOR BRG TYPE 400	1C/18	
--	--	4	4	bgw	PL 11 5/16 x 14GA.	2	0½	A240 TYPE 304 FOR BRG TYPE 1000	1C/15	
--	--	4	4	bgy	PL 12 1/16 x 14GA.	2	3⅞	A240 TYPE 304 FOR BRG TYPE 1100	1C/13	
--	4	--	4	bha	PL 14 11/16 x 14GA.	2	5¾	A240 TYPE 304 FOR BRG TYPE 1500	1C/11	
--	4	--	4	bhb	PL 16 7/16 x 14GA.	3	0½	A240 TYPE 304 FOR BRG TYPE 1800	1C/8	
16	--	--	16	bhc	PL 11 7/16 x 14GA.	1	10½	A240 TYPE 304 FOR BRG. TYPE 900	1C/16	
--	--	12	12	bhd	PL 12 11/16 x 14GA.	2	0⅞	A240 TYPE 304 FOR BRG. TYPE 1100	1C/14	

NOTES:

NOTE "A": SURFACES INDICATED ARE TO BE STRAIGHT AND TRUE; FINISH IF NECESSARY.

NOTE "X": SURFACES INDICATED ARE TO BE MACHINED FLAT TO .01"/FT.(.04" MAXIMUM)

ALL DIMENSIONS GIVEN THUS: 2.21 ARE DECIMALS OF AN INCH.
FOR NOTES AND REFERENCE, SEE DRAWING D-1001-1A.
MATERIAL TO BE ASTM A588 (U.N.)

SHOP NOTE

HOLES: NONE
BOLTS: NONE

R95-157

CODE: 6000

NO.	REVISION	DATE
1	altered as per 10-11-84 appv'l	10-17-84

HIGH STEEL STRUCTURES, INC.
1505 Old Philadelphia Pike
Lancaster, Pennsylvania 17603
Phone 717/299-5211
A Subsidiary of High Industries, Inc.

POT BEARING DETAILS
I-395 BRIDGE OVER PENOBSCOT RIVER
I-395 BRIDGE STA. 164+60.00
PENOBSCOT COUNTY
STATE OF MAINE
DEPARTMENT OF TRANSPORTATION

STATE CONTRACT OR REF.NO. 6 CONTRACTOR CIANBRO CORP.
IN CHARGE: HINKLE MADE BY: B.J.K. CHK.D. BY: JCH DATE: 8-16-84 DATE: 7-2-84
CONTRACT NUMBER: ME-84088-1,2,3 DRAWING NUMBER: D-1001-1E

61

FED.ROAD DIV.NO.	STATE	FED.AID PROJ.NO.
1	ME.	I-IG-395-8(82)176

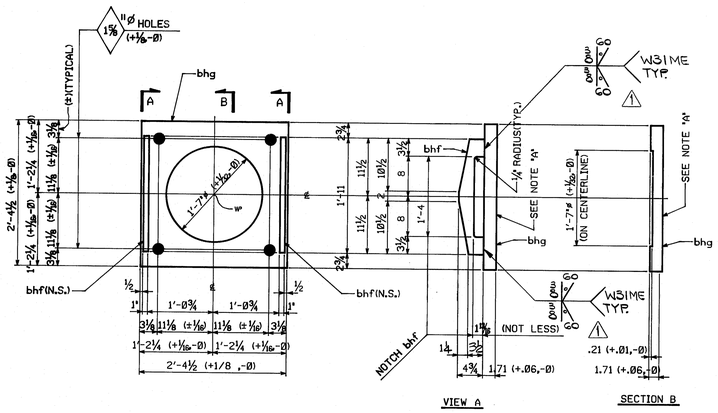

MASONRY PLATES AT PIER 2-SPAN 3

BEARING TYPE N-600(9) AT GIRDERS 1,2,3,6,,7,8
BEARING TYPE G-600(9) AT GIRDERS 4,5

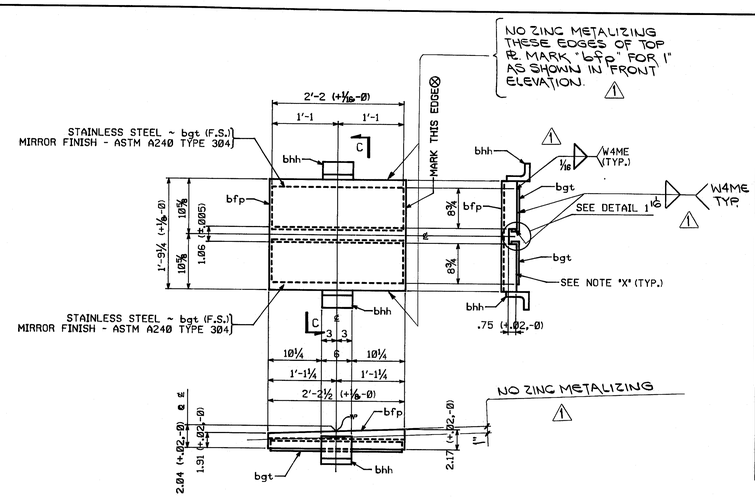

SOLE PLATES AT PIER 2 - SPAN 3

BEARING TYPE G-600(9) AT GIRDERS 4,5

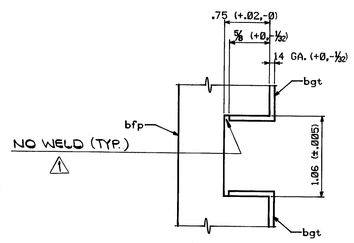

ENLARGED DETAIL 1

BILL OF MATERIAL

ALL MATERIAL REQUIRED FOR SHIPMENT #2

NO.	MARK	DESCRIPTION	LENGTH		REMARKS	ITEM	SHP. WEIGHT EA.
		MASONRY PLATES			FOR BRG. TYPE 600		
16	bhf	BAR 4¾ x 1"	1	11	ASTM A514	1E 28	
8	bhg	PL 28½ x 1.71	2	4½		1A 8	
		SOLE PLATES			FOR BRG. TYPE N-600(9)		
1	bcm	PL 21¼ x (2.21 x 1.87)	2	2½		1B 20	
1	bcn	PL 21¼ x (2.20 x 1.88)	2	2½		1B 20	
1	bcp	PL 21¼ x (2.19 x 1.89)	2	2½		1B 20	
1	bcs	PL 21¼ x (2.16 x 1.92)	2	2½		1B 22	
1	bct	PL 21¼ x (2.15 x 1.93)	2	2½		1B 22	
1	bcw	PL 21¼ x (2.13 x 1.95)	2	2½		1B 22	
6	bfb	PL 18⅜ x 14 GA.	2	2	A240 TYPE 304	1C 7	
12	bhh	L4⅝ x 3½ x (1.14x1.04)	0	6	MACHINED FROM SOLID BLOCK (ASTM A514)	1E 26	
		SOLE PLATES			FOR BRG. TYPE G-600(9)		
2	bfp	PL 21¼ x (2.17 x 1.91)	2	2½		1B 22	
4	bgt	PL 9⅞ x 14 GA.	2	2	A240 TYPE 304	1C 17	
4	bhh						

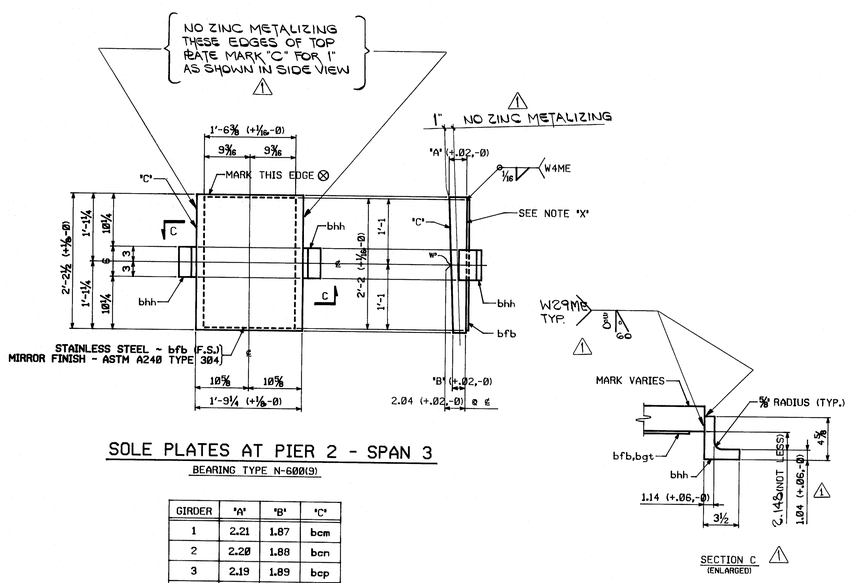

SOLE PLATES AT PIER 2 - SPAN 3

BEARING TYPE N-600(9)

GIRDER	"A"	"B"	"C"
1	2.21	1.87	bcm
2	2.20	1.88	bcn
3	2.19	1.89	bcp
6	2.16	1.92	bcs
7	2.15	1.93	bct
8	2.13	1.95	bcw

NOTES:

NOTE "A": SURFACES INDICATED ARE TO BE STRAIGHT AND TRUE; FINISH IF NECESSARY.

NOTE "X": SURFACES INDICATED ARE TO BE MACHINED FLAT TO .01"/FT. (.04" MAXIMUM).

ALL DIMENSIONS GIVEN THUS: 1.71 ARE DECIMALS OF AN INCH.
FOR NOTES AND REFERENCE, SEE DRAWING D-1001-1A AND D-1003-1A.
MATERIAL TO BE ASTM A588 (U.N.).

SHOP NOTE

HOLES: AS NOTED
BOLTS: NONE

R95-158

CODE:6000

NO.	REVISION	DATE
1	altered as per 10-11-84 appv'l	9-28-84 10-17-84

HIGH STEEL STRUCTURES, INC.
1905 Old Philadelphia Pike Lancaster, Pennsylvania 17603 Phone 717/299-521
A Subsidiary of High Industries, Inc.

POT BEARING DETAILS
I-395 BRIDGE OVER PENOBSCOT RIVER
I-395 BRIDGE STA. 164+60.00
PENOBSCOT COUNTY
STATE OF MAINE
DEPARTMENT OF TRANSPORTATION

STATE CONTRACT OR REF.NO. 6 CONTRACTOR CIANBRO CORP.
IN CHARGE: HINKLE MADE BY: B.J.K. CHK.D. BY: TCH DATE: 8-17-84
CONTRACT NUMBER: ME-84088-2 DRAWING NUMBER: D-1001-1F

AF 22683A

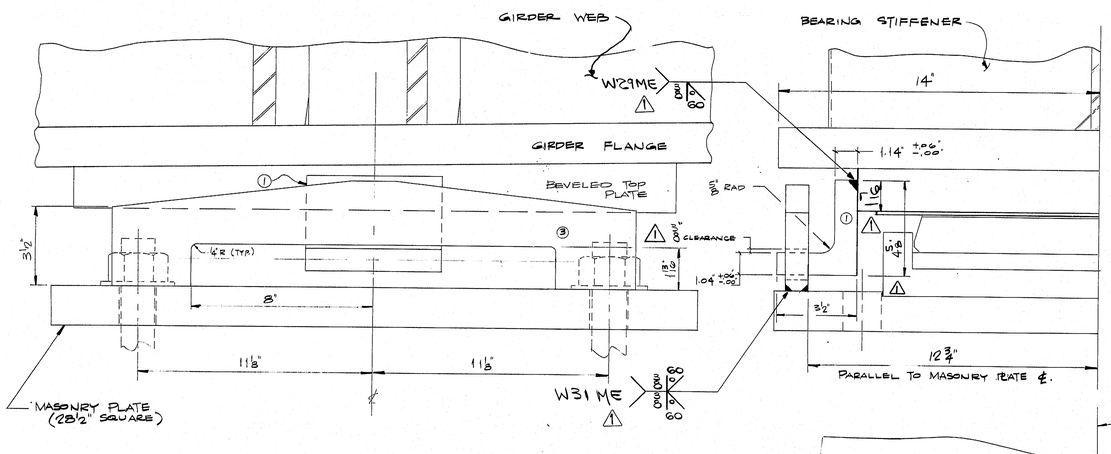

SIDE ELEVATION

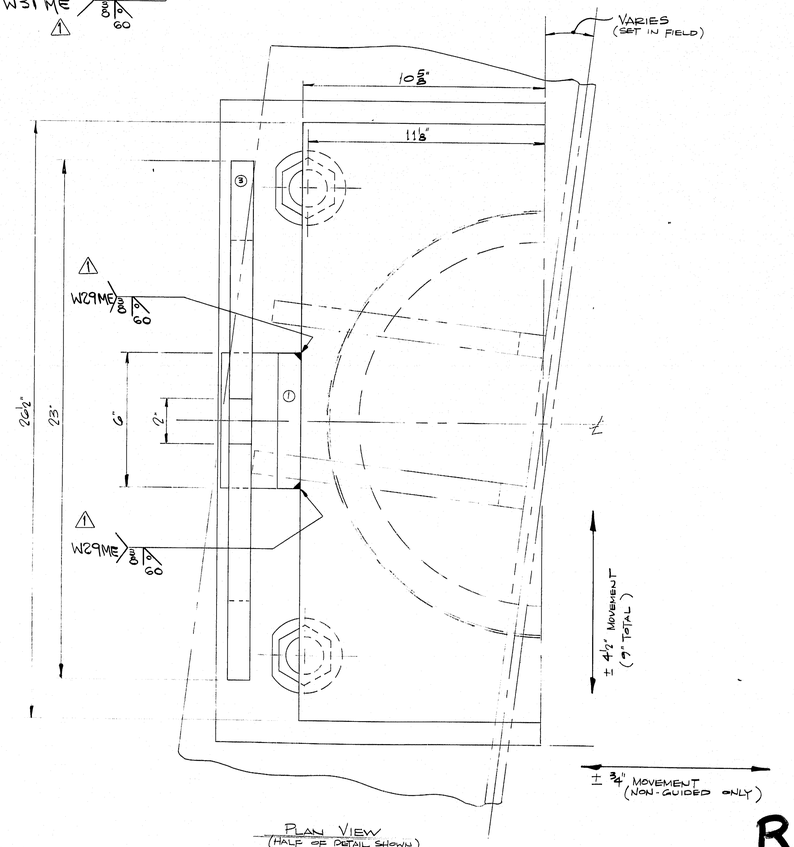

PLAN VIEW (HALF OF DETAIL SHOWN)

NOTES:

1. WORK THIS DRAWING WITH D-1001-1A.
2. UPLIFT PER BEARING: 45# MIN.
3. DIMENSIONS & CLEARANCES GIVEN ALLOW FOR REMOVAL OF BASE/CYLINDER. ALSO, ALLOWS FOR MOVEMENT TO EXTREME LIMIT AS REQUIRED ON CONTRACT DRAWINGS.

FED. ROAD DIV. NO.	STATE	FED. AID PROJ. NO.

BILL OF MATERIAL

NO.	MARK	DESCRIPTION	LENGTH	REMARKS	ITEM	WEIGHT
	1	L 4 5/8 x 3 1/2 x (1.14, 1.04) –	6"	ASTM A514 MACHINE ANGLE FROM SOLID PLATE		
	3	4 3/4 x 1'	1' 11"	ASTM A514		

SHOP NOTE

HOLES: } REFER TO
BOLTS: } DWG. D-1001-1A
PAINT: }

R95-159

CODE: 6000

NO.	REVISION	DATE
1	altered as per 10-11-84 appr'l	9-28-84 10-17-84

HIGH STEEL STRUCTURES, INC.
1905 Old Philadelphia Pike
Lancaster, Pennsylvania 17603
Phone 717/299-5211
A Subsidiary of High Industries, Inc

STATE OF MAINE · DEPT. OF TRANSPORTATION
I-395 BRIDGE OVER PENOBSCOT RIVER
BANGOR - BREWER PENOBSCOT COUNTY
UPLIFT DETAILS FOR PIER 2 - SPAN 3

BEARING DETAILS BY BERMAG CORP. INT'L, FAIRFIELD, N.J. 06177-4

STATE CONTRACT OR REF. NO. 6 CONTRACTOR CIANBRO CORP.

IN CHARGE: MADE BY B. BUTTS BY: B. 9-28-84 CHK.D. BY: DATE: 8-6-84

CONTRACT NUMBER: ME-84088-1,2,3 DRAWING NUMBER: D-1003-1A

© 1984 POLYTRACE 026

FED. ROAD DIV. NO.	STATE	FED. AID PROJ. NO.
1	ME	I-IG-395-8(82)176

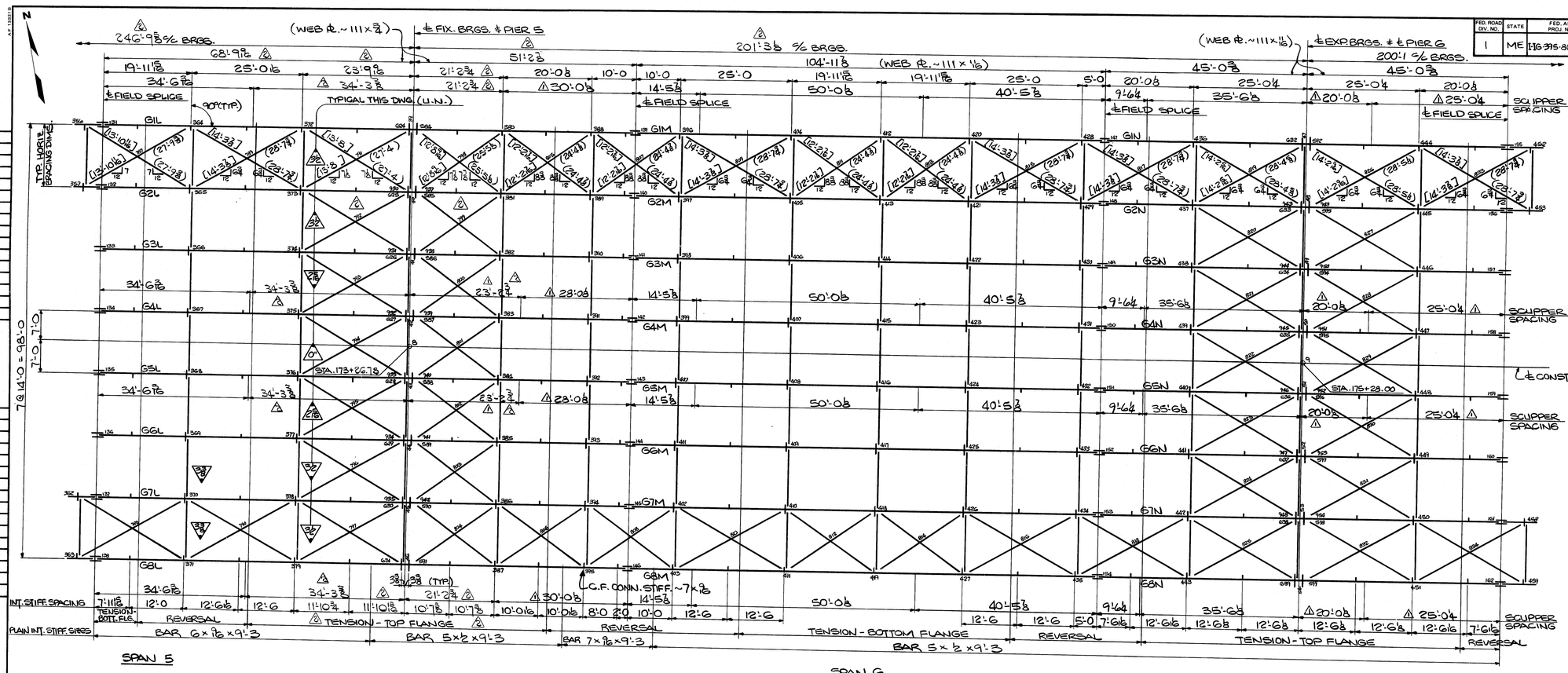

STIFFENER SIZES

BEARING STIFFS. - PIER 5 ~ 12×1 1/8
PIER 6 ~ 10×1"

C.F. CONN. STIFFS. ~ 7×1/2 (U.N.)

PLAIN INT. STIFFS. ~ AS NOTED

STIFFENER CORNER CLIPS

BRG. STIFFS. ~ 1 1/2×3 1/2 @ 11/16" THK. WEB PL
1 1/2×4 1/2 @ 3/4" THK. WEB PL

OTHERS ~ 3 1/2×3 1/2 @ 11/16" THK. WEB PL
3 1/2×4 1/2 @ 3/4" THK. WEB PL

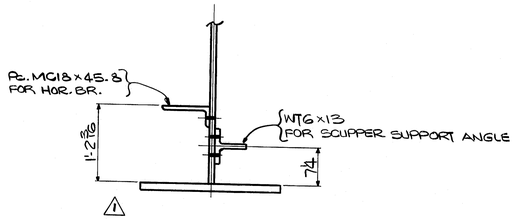

SCUPPER SUPPORT WT6×13 SETTING @ PTS. 380 & 387

FOR FIGURING PLAN NOTES, SEE DWG. WS1 ON CONTRACT # ME-84088-1.

FOR WELDING OF INT. STIFFS. & C.F. CONN. STIFFS., SEE DWG. WS1 ON CONTRACT # ME-84088-1.

WORK THIS DWG. WITH DWGS. WS2 THRU WS

NO.	REVISION	DATE
2	Revised span length & bracing @ Pier 5 "Control" 16	1-12-85
1	CONTRACT REVISION CONTROL #14	9-11-84

HIGH STEEL STRUCTURES, INC.
1905 Old Philadelphia Pike
Lancaster, Pennsylvania 17603
Phone 717/299-5211
A Subsidiary of High Industries, Inc.

FIGURING PLAN ~ SPANS 5, 6 & 7
I-395 BRIDGE OVER PENOBSCOT RIVER
I-395 BRIDGE STA. 164+60.00
PENOBSCOT COUNTY
STATE OF MAINE
DEPARTMENT OF TRANSPORTATION

STATE CONTRACT OR REF. NO. 6 CONTRACTOR CIANBRO CORP.

IN CHARGE: HINKLE MADE BY: BJK CHK.D. BY: JLC DATE: 7-10-84

CONTRACT NUMBER: ME-84088-3 DRAWING NUMBER: WS1

R95-160

© 1984 POLYTRACE® CORP.

FED. ROAD DIV. NO.	STATE	FED. AID PROJ. NO.
1	ME	I-95-3(95-8)(82)176

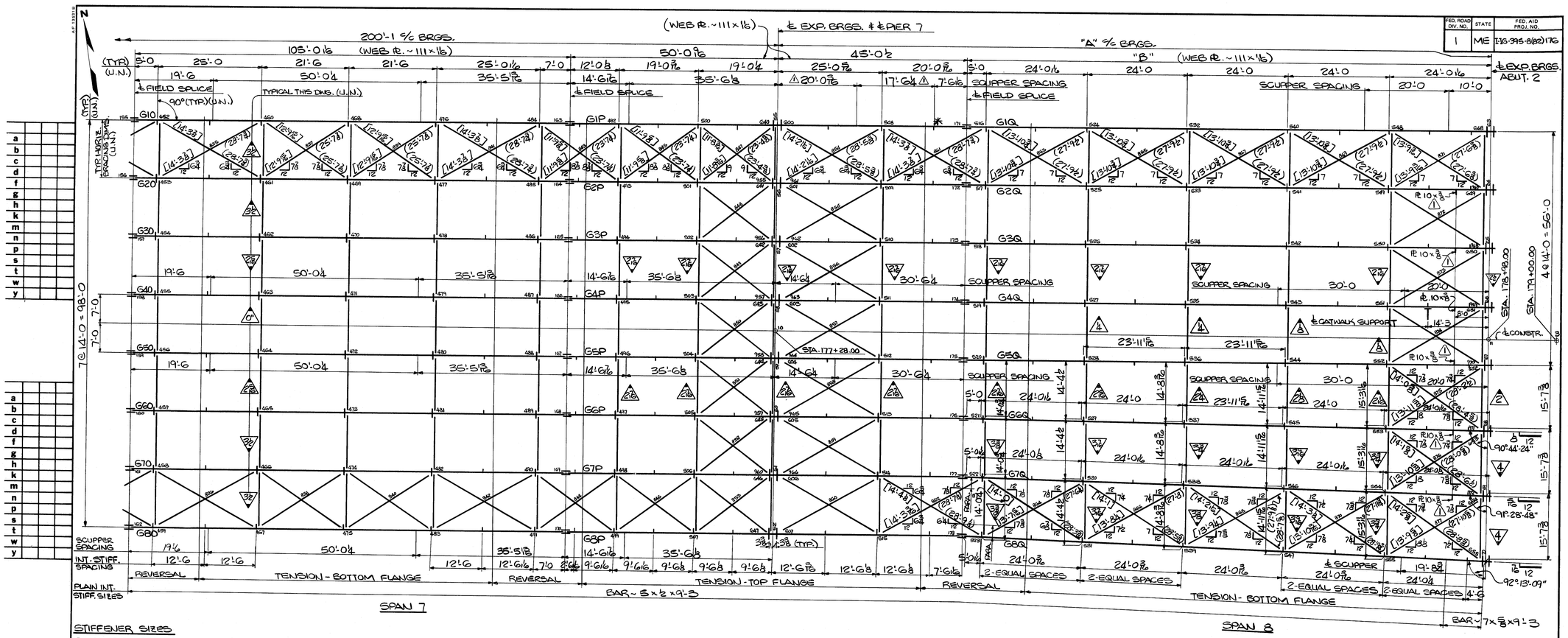

STIFFENER SIZES

BEARING STIFFS. ~ PIER 7 ~ 10 x 1
ABUT. 2 ~ 9 x 1

C.F. CONN. STIFFS. ~ 7 x ½

PLAIN INT. STIFFS. ~ AS NOTED

STIFFENER CORNER CUPS

BRG. STIFFS. ~ 12 x 3½

OTHERS ~ 3½ x 3½

LINE	"A"	"B"
G1	170'-0 5/8	125'-0 1/8
G2	170'-0 5/8	125'-0 1/8
G3	170'-0 5/8	125'-0 1/8
G4	170'-0 5/8	125'-0 1/8
G5	170'-0 1/2	125'-0
G6	170'-0 9/16	125'-0 1/16
G7	170'-1	125'-0 1/2
G8	170'-1 9/16	125'-1 1/16

WORK THIS DWG. WITH DWGS. WS1 & WS3

NO.	REVISION	DATE
1	CONTRACT REVISION CONTROL #14	9-11-84

HIGH STEEL STRUCTURES, INC.
1905 Old Philadelphia Pike
Lancaster, Pennsylvania 17603
Phone 717/299-5211
A Subsidiary of High Industries, Inc.

FIGURING PLAN ~ SPANS 7 & 8
I-395 BRIDGE OVER PENOBSCOT RIVER
I-395 BRIDGE STA. 164+60.00
PENOBSCOT COUNTY
STATE OF MAINE
DEPARTMENT OF TRANSPORTATION

STATE CONTRACT OR REF. NO. 6 CONTRACTOR CIANBRO CORP.

IN CHARGE: HINKLE MADE BY: BJK CHK.D. BY: JLC DATE: 7-10-84

CONTRACT NUMBER ME-84088-3 DRAWING NUMBER: WS2

R95-161

FED. ROAD DIV. NO.	STATE	FED. AID PROJ. NO.
1	ME.	I-IG-395-8(82)176

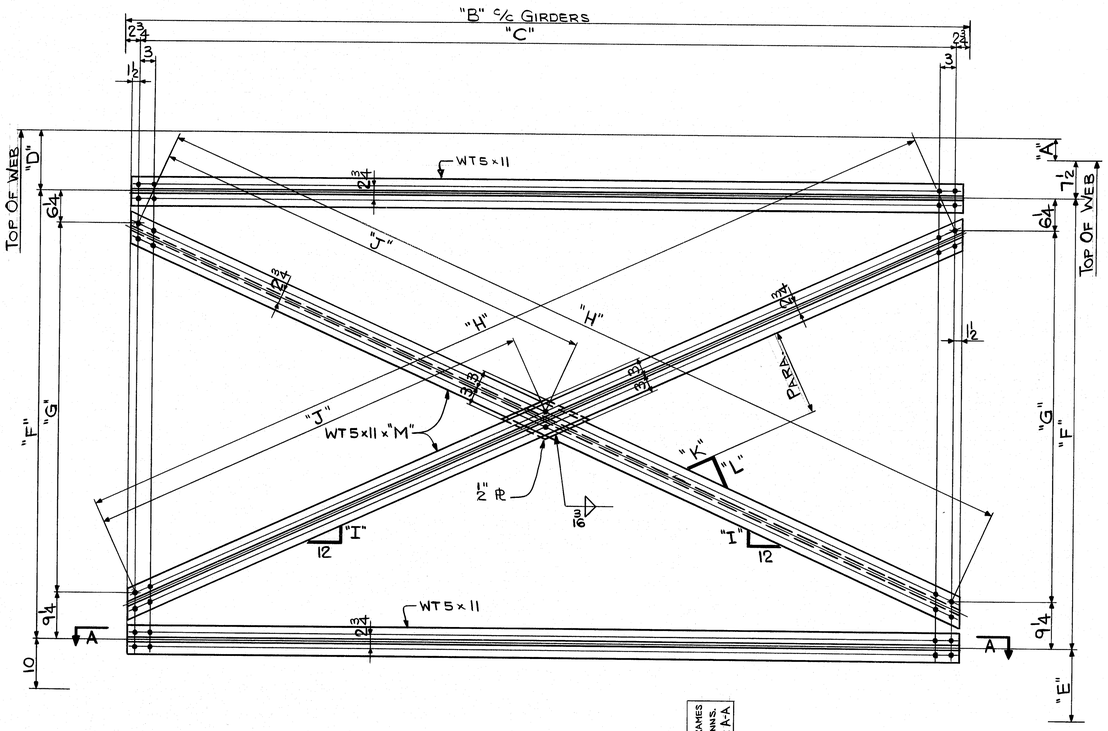

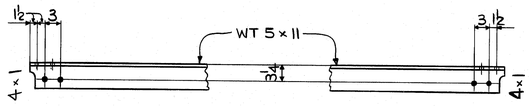

SECTION A-A

FOR FRAMES WITH H.B. CONNS. SEE CHART

"A"	"B"	"C"	"D"	"E"	"F"	"G"	"H"	"I"	"J"	"K"	"L"	"M"	No. OF FRAMES W/ H.B. CONNS. SEE SECT A-A
2 5/16	14'-0	13'-6 1/2	9 13/16	1'-0 5/16	7'-7 3/16	6'-3 11/16	14'-11 1/4	5 9/16	7'-5 5/8	10 1/16	12	15'-5 1/4	4
2 1/16	↓	↓	9 15/16	1'-0 7/16	7'-7 1/16	6'-3 9/16	14'-11 3/16	5 9/16	7'-5 5/8	10 1/8	12	15'-5 3/16	3
3 3/8			10 1/8	1'-1 3/8	7'-6 1/8	6'-2 5/8	14'-10 13/16	5 1/2	7'-5 7/16	10 5/16	12	15'-4 3/4	1
3 1/2	14'-0	13'-6 1/2	11	1'-1 1/2	7'-6	6'-2 1/2	14'-10 3/4	5 1/2	7'-5 3/8	10 5/16	12	15'-4 11/16	44
2 5/16	14'-4 1/2	13'-11	9 13/16	1'-0 5/16	7'-7 3/16	6'-3 11/16	15'-3 3/8	5 7/16	7'-7 11/16	10 1/2	12	15'-9 1/4	0
3 1/16	14'-4 1/2	13'-11	10 15/16	1'-1 7/16	7'-6 9/16	6'-2 9/16	15'-2 7/8	5 3/8	7'-7 7/16	10 3/4	12	15'-8 3/4	1
2 1/4	14'-8 3/16	14'-2 11/16	9 3/4	1'-0 1/4	7'-7 1/4	6'-3 3/4	15'-6 3/4	5 5/16	7'-9 3/8	10 7/8	12	16'-0 7/16	0
3 3/8	14'-8 3/16	14'-2 11/16	10 7/8	1'-1 3/8	7'-6 1/8	6'-2 5/8	15'-6 5/16	5 1/4	7'-9 1/8	11 1/8	12	16'-0 1/16	1
3 3/4	14'-8 3/16	14'-2 11/16	11 1/4	1'-1 3/4	7'-5 3/4	6'-2 1/4	15'-6 1/8	5 1/4	7'-9 1/16	11 3/16	12	15'-11 15/16	0
2 1/8	14'-11 15/16	14'-6 7/16	9 5/8	1'-0 1/8	7'-7 3/8	6'-3 1/8	15'-10 1/4	5 1/4	7'-11 1/8	11 3/16	12	16'-4	0
3 9/16	14'-11 15/16	14'-6 7/16	11 1/16	1'-1 7/16	7'-5 15/16	6'-2 7/16	15'-9 5/8	5 1/8	7'-10 13/16	11 1/2	12	16'-3 3/8	1
2 1/16	15'-3 11/16	14'-10 3/16	9 9/16	1'-0 1/16	7'-7 7/16	6'-3 15/16	16'-1 11/16	5 1/8	8'-0 7/8	11 1/2	12	16'-7 3/8	1
3 3/4	15'-3 11/16	14'-10 3/16	11 1/4	1'-1 3/4	7'-5 3/4	6'-2 1/4	16'-1 1/16	5	8'-0 1/2	11 1/8	12	16'-6 11/16	2

R95-162

WORK THIS DWG. WITH DWGS. WS1, WS2, & WS5

NO.	REVISION	DATE

HIGH STEEL STRUCTURES, INC.
1905 Old Philadelphia Pike
Lancaster, Pennsylvania 17603
Phone 717/299-5211
A Subsidiary of High Industries, Inc

INT. CROSSFRAME LAYOUTS ("M")
I-395 BRIDGE OVER PENOBSCOT RIVER
I-395 BRIDGE STA. 164+60.00
PENOBSCOT COUNTY
STATE OF MAINE
DEPARTMENT OF TRANSPORTATION

STATE CONTRACT OR REF. NO. 6 CONTRACTOR CIANBRO CORP.
IN CHARGE: HINKLE MADE BY: JLC CHK.D. BY: BJK DATE: 7-26-84
CONTRACT NUMBER: ME-84088-3 DRAWING NUMBER: WS3

© 1984 POLYTRACE® 026

FED. ROAD DIV. NO.	STATE	FED. AID PROJ. NO.
1	ME.	I-IG-395-8(82)176

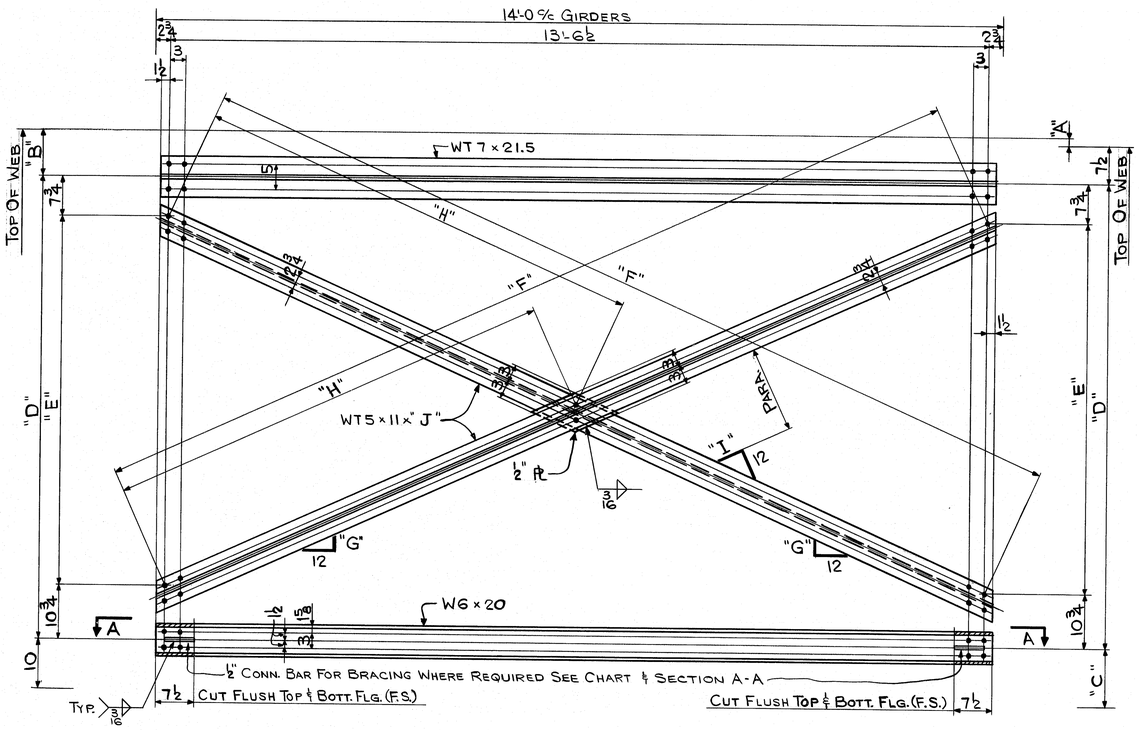

"A"	"B"	"C"	"D"	"E"	"F"	"G"	"H"	"I"	"J"	No. Of Braces W/H.B. Conns. See Sect. A-A.
0	7½	10	7'-9½	6'-3	14'-11	5 9/16	7'-5½	10¼	15'-4 15/16	3
⅛	7⅜	10⅛	7'-9⅜	6'-2⅞	14'-10 15/16	5½	7'-5 7/16	10¼	15'-4⅞	1
¼	7¾	10¼	7'-9¼	6'-2¾	14'-10⅞	5½	7'-5 7/16	10 5/16	15'-4 13/16	0

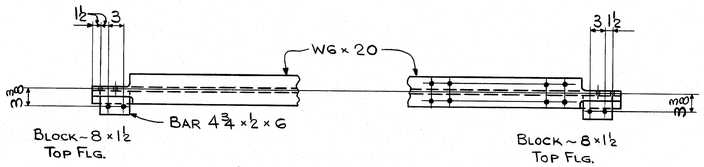

SECTION A-A

FOR FRAMES WITH H.B. CONNS. SEE CHART

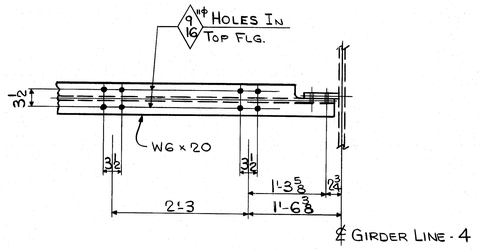

SECTION - A

TYP. HOLE SPACING FOR CATWALK CONN.

R95-163

WORK THIS DWG. WITH DWGS. WS1, WS2, & WS5

NO.	REVISION	DATE

HIGH STEEL STRUCTURES, INC.
1905 Old Philadelphia Pike
Lancaster, Pennsylvania 17603
Phone 717/299-5211
A Subsidiary of High Industries, Inc.

INT. CROSSFRAME LAYOUTS ("M2" MOD.)
I-395 BRIDGE OVER PENOBSCOT RIVER
I-395 BRIDGE STA. 164+60.00
PENOBSCOT COUNTY
STATE OF MAINE
DEPARTMENT OF TRANSPORTATION

STATE CONTRACT OR REF. NO. 6 CONTRACTOR CIANBRO CORP.

IN CHARGE: HINKLE MADE BY: JLC CHK.D. BY: BJK DATE: 7-26-84

CONTRACT NUMBER: ME-84088-3 DRAWING NUMBER: WS4

© HIGH POLYTRACE CO.

FED. ROAD DIV. NO.	STATE	FED. AID PROJ. NO.
1	ME	I-IG-395-8(82)176

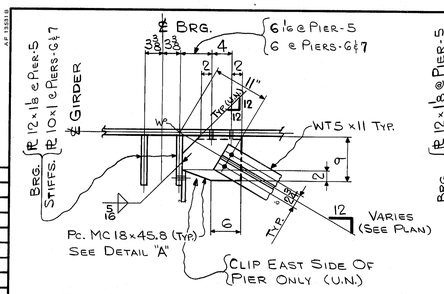

TYP. BRACING CONN. AT PIERS (U.N.)

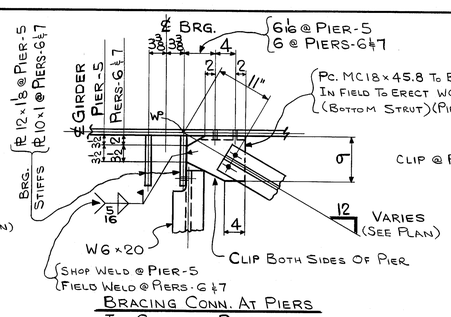

BRACING CONN. AT PIERS IN CATWALK BAY

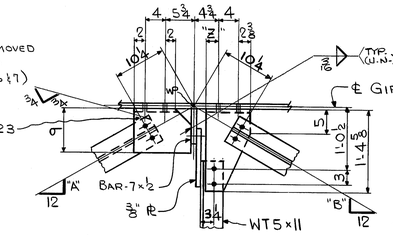

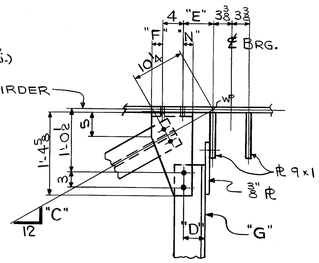

POINT	"A"	"B"	"Z"
396, 397, 402, & 403	8 3/8	6 3/4	2 3/8
452, 453, 458 & 459	6 3/4	7 7/8	2 3/8
516 & 517	6 3/4	7	2 3/8
* 522	7 7/8	7 7/8	2 3/8
* 523	6 1/4	7 7/8	3

POINT	"C"	"D"	"E"	"F"	"G"	"N"
648, 649, 650, 651, 967, 968, 969, 970	7	3 1/4	4 7/8	2 1/4	WT5×11	2 1/4
652	7 3/4	5	6 3/8	2	WT7×21.5	2
971 & 972	7 5/8	↓	↓	↓	↓	2
654*	7 7/8	↓	↓	↓	↓	2 3/8
655*	7 1/2	↓	↓	↓	↓	2
653*	7 3/4	5	6 3/8	2	WT7×21.5	2 1/4

* INDICATES CROSSFRAME SKEWED (SEE PLAN)

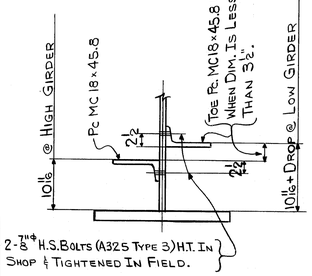

DETAIL "A"

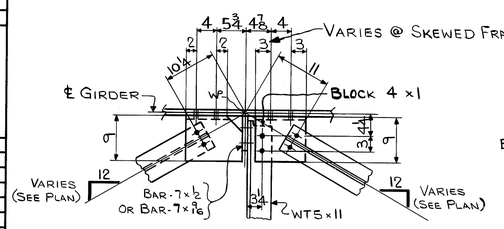

TYP. BRACING CONN. (U.N.)

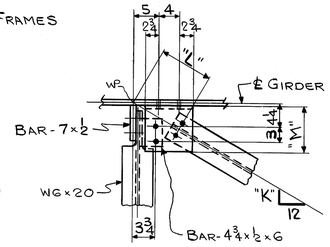

BRACING CONN. IN CATWALK BAY (U.N.)

POINT	"K"	"L"	"M"
375, 376, 439, & 440	6 3/4	10 1/4	9
503 & 504	9	11 1/2	9 1/2
551 & 552	7	10 1/2	9

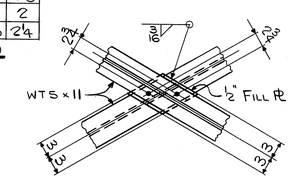

TYP. BRACING INTERSECTION CONN. (U.N.)

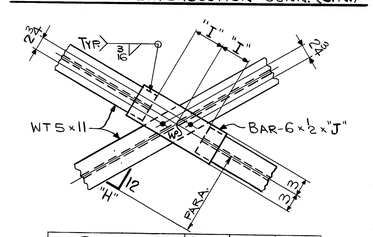

POINT	"H"	"I"	"J"
794	6 1/2	5 3/4	1'-6
△2 822, 829, 857	7 13/16	6	1'-7
801	5 5/8	5 1/4	1'-5
850	3 13/16	4 3/4	1'-4
874	6 5/8	5 3/4	1'-6

NO.	REVISION	DATE
△2	Revised span length Central 1/16	1-12-85
△1	Construction joint moved	11-19-84

HIGH STEEL STRUCTURES, INC.
1905 Old Philadelphia Pike
Lancaster, Pennsylvania 17603
Phone 717/299-5211
A Subsidiary of High Industries, Inc.

BRACING LAYOUTS
I-395 BRIDGE OVER PENOBSCOT RIVER
I-395 BRIDGE STA. 164+60.00
PENOBSCOT COUNTY
STATE OF MAINE
DEPARTMENT OF TRANSPORTATION

STATE CONTRACT OR REF. NO. 6 CONTRACTOR CIANBRO CORP.
IN CHARGE: HINKLE MADE BY: JLC CHK.D. BY: BJK DATE: 7-26-84
CONTRACT NUMBER: ME-84088-3 DRAWING NUMBER: WS5

R95-164

WORK THIS DWG. WITH DWGS. WS1 THRU WS4

NOTE:
CROSSFRAMES BETWEEN GIRDERS G7Q & G8Q IN SPAN-8 ARE SKEWED (SEE PLAN)

© DRAFTEX POLYTRACE® 035

FED. ROAD DIV. NO.	STATE	FED. AID PROJ. NO.
1	ME	I-IG-395-8(82)176

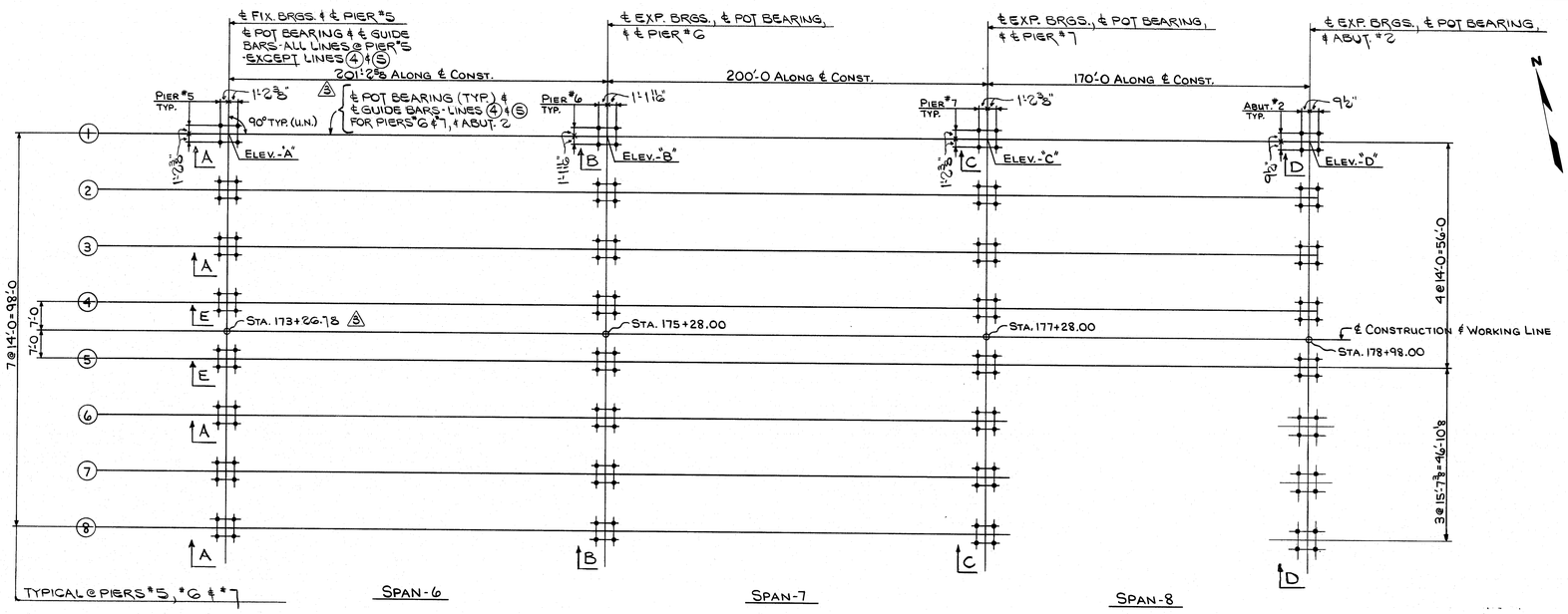

ANCHOR BOLT PLAN

LINE	"A"	"B"	"C"	"D"
1	81.57	77.75	72.10	67.25
2	81.86	78.04	72.39	67.54
3	82.15	78.33	72.68	67.83
4	82.03	78.14	72.48	67.63
5	82.03	78.14	72.48	67.63
6	82.15	78.33	72.68	67.80
7	81.86	78.04	72.39	67.47
8	81.57	77.75	72.10	67.15

NOTES:

1. All dimensions are given horizontally.
2. Elevations are given to top of concrete pad.
3. Anchor bolt settings must be exact in every detail in accordance with this drawing.
4. Anchor bolts are furnished by High Steel Structures, Inc., and set by others.
5. FOR POT BEARINGS SEE DRAWINGS D-1001-1A THRU D-1001-1F & D-1003-1A.
6. THICKEST EDGE OF SOLE PL. MARKED THUS ⊗
7. TOP OF CONCRETE ELEVATIONS & ANCHOR BOLT SPACINGS HAVE BEEN MADE TO CONFORM TO BEARING DETAILS ON DWG. D-1001-1A.
8. SPECIAL BRIDGE SEAT PREPARATION & GROUTING OF ANCHOR BOLT HOLES, REQUIRED BY CONTRACT DOCUMENTS, BY OTHERS THAN HIGH STEEL STRUCTURES, INC.
9. UPSET THREADS ABOVE NUT FOR ALL ANCHOR BOLTS. (AB MARKS).

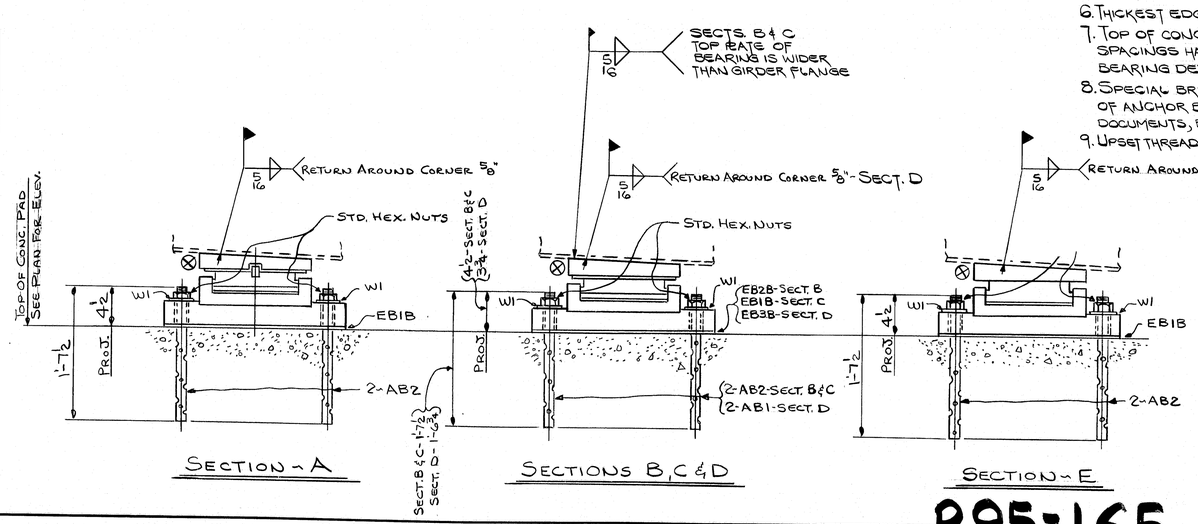

NO.	REVISION	DATE
3	Revised span length Contrl # 16	1-12-85
2	Revised Elevations As per pot des. rev.	9-28-84
1	general revision to agree with pot bearings	8-15-84

HIGH STEEL STRUCTURES, INC.
1905 Old Philadelphia Pike
Lancaster, Pennsylvania 17603
Phone 717/299-5211
A Subsidiary of High Industries, Inc.

ANCHOR BOLT PLAN
I-395 BRIDGE OVER PENOBSCOT RIVER
I-395 BRIDGE STA. 164+60.00
PENOBSCOT COUNTY
STATE OF MAINE
DEPARTMENT OF TRANSPORTATION

STATE CONTRACT OR REF. NO. 6 CONTRACTOR CIANBRO CORP.
IN CHARGE: HINKLE MADE BY: G.F.Z. FDS CHK.D. BY: CS DATE: 6-26-84
CONTRACT NUMBER: ME-84088-3 DRAWING NUMBER: E1C

R95-165

© 1984 POLYTRACE 035

FED. ROAD DIV. NO.	STATE	FED. AID PROJ. NO.
1	ME	IG 395-8(82)176

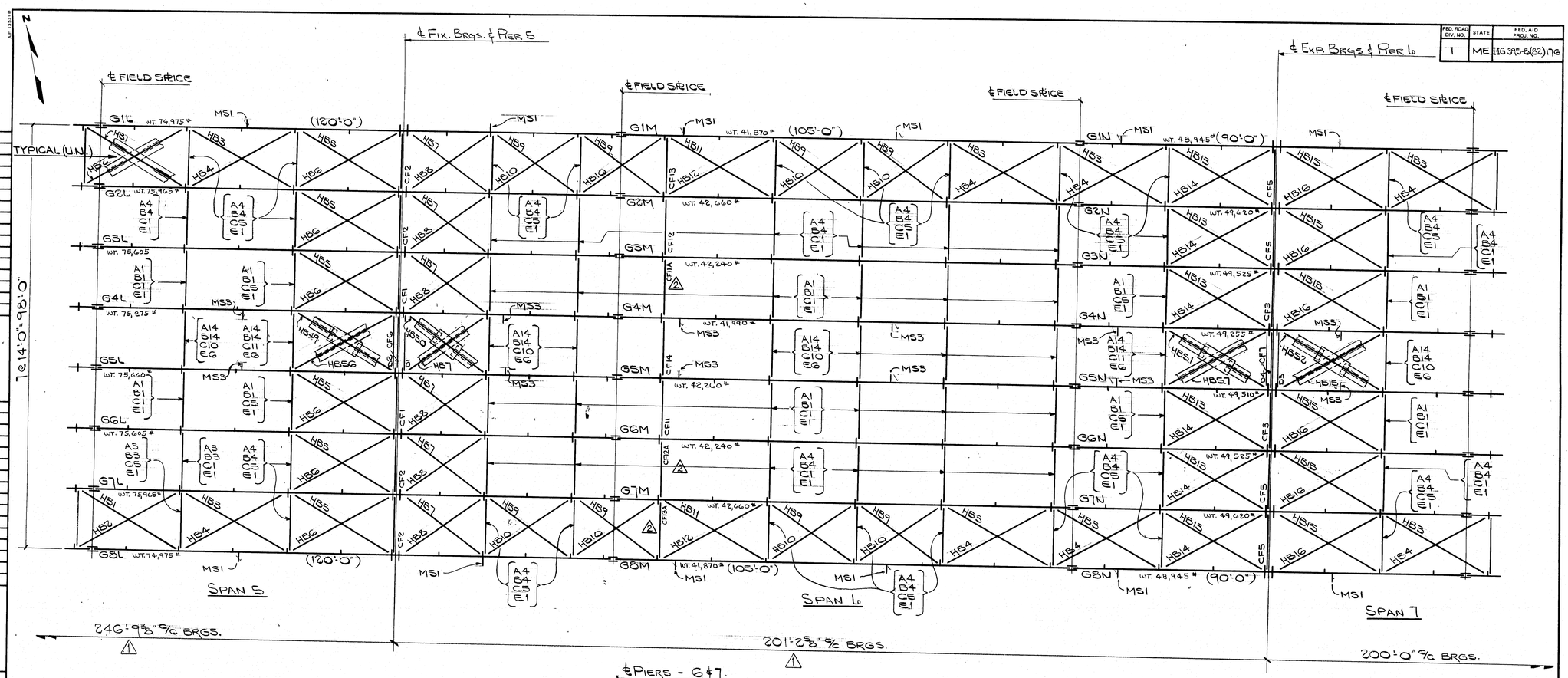

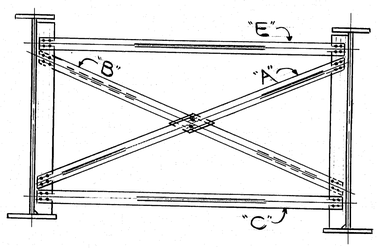

TYPICAL CROSSFRAME SECTION
(SHAPES VARY)

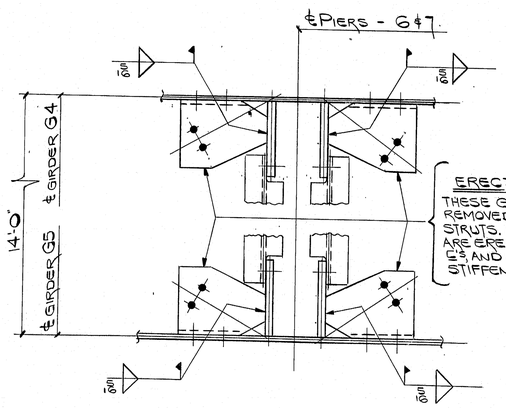

ERECTION NOTE
THESE GUSSET ℄'s MUST BE REMOVED TO ERECT BOTTOM STRUTS. AFTER BOTTOM STRUTS ARE ERECTED, REPLACE GUSSET ℄'S, AND FIELD WELD TO BRG. STIFFENERS.

NOTES

1. ALL DIMENSIONS ARE GIVEN HORIZONTALLY.
2. ALL STEEL TO BE A588 (U.N.) UNPAINTED.
3. ALL FIELD CONNECTIONS ARE TO BE MADE WITH 3/4" H.S. BOLTS - A325 TYPE 3 (U.N.).
4. FOR BEARING ASSEMBLIES SEE DWG. E1.
5. BOLTS FOR GUSSET CHANNELS TO BE TORQUED IN FIELD.
6. STUD SHEAR CONNECTORS, EXPANSION DAM MATERIAL, & CAT WALK FRAMING NOT BY HIGH STEEL STRUCTURES, INC.
7. FOR GENERAL NOTES SEE DWG. N1.
8. WORK THIS DWG. WITH DWGS. E3 & E4.
9. ℄/G BRG. DIMENSIONS GIVEN ALONG ℄ GIRDER.
10. DIMENSIONS SHOWN THUS: (120'-0") ARE THE SHIPPING LENGTHS OF FASCIA GIRDERS.

R95-166

ERECTION NOTE:

No credit will be allowed for work performed by others in replacing or correcting materials or workmanship covered by this drawing unless expressly authorized by High Steel Structures, Inc.

NO.	REVISION: CHANGED MARK LOCATION	DATE 6-12-85
NO. 1	REVISION: Revised span length control line	DATE 1-12-85

HIGH STEEL STRUCTURES, INC.
1905 Old Philadelphia Pike
Lancaster, Pennsylvania 17603
Phone 717/299-5211
A Subsidiary of High Industries, Inc

ERECTION PLAN
I-395 BRIDGE OVER PENOBSCOT RIVER
I-395 BRIDGE STA. 164+60.00
PENOBSCOT COUNTY
STATE OF MAINE
DEPARTMENT OF TRANSPORTATION

STATE CONTRACT OR REF. NO. G CONTRACTOR CIANBRO CORP.
IN CHARGE HINKLE MADE BY: CS CHK.D BY: JLC DATE 9-26-84
CONTRACT NUMBER: ME-84088-3 DRAWING NUMBER: E2

© HSSI POLYTRACE 038

FED. ROAD DIV. NO.	STATE	FED. AID PROJ. NO.
1	ME	HG-395-8(82)176

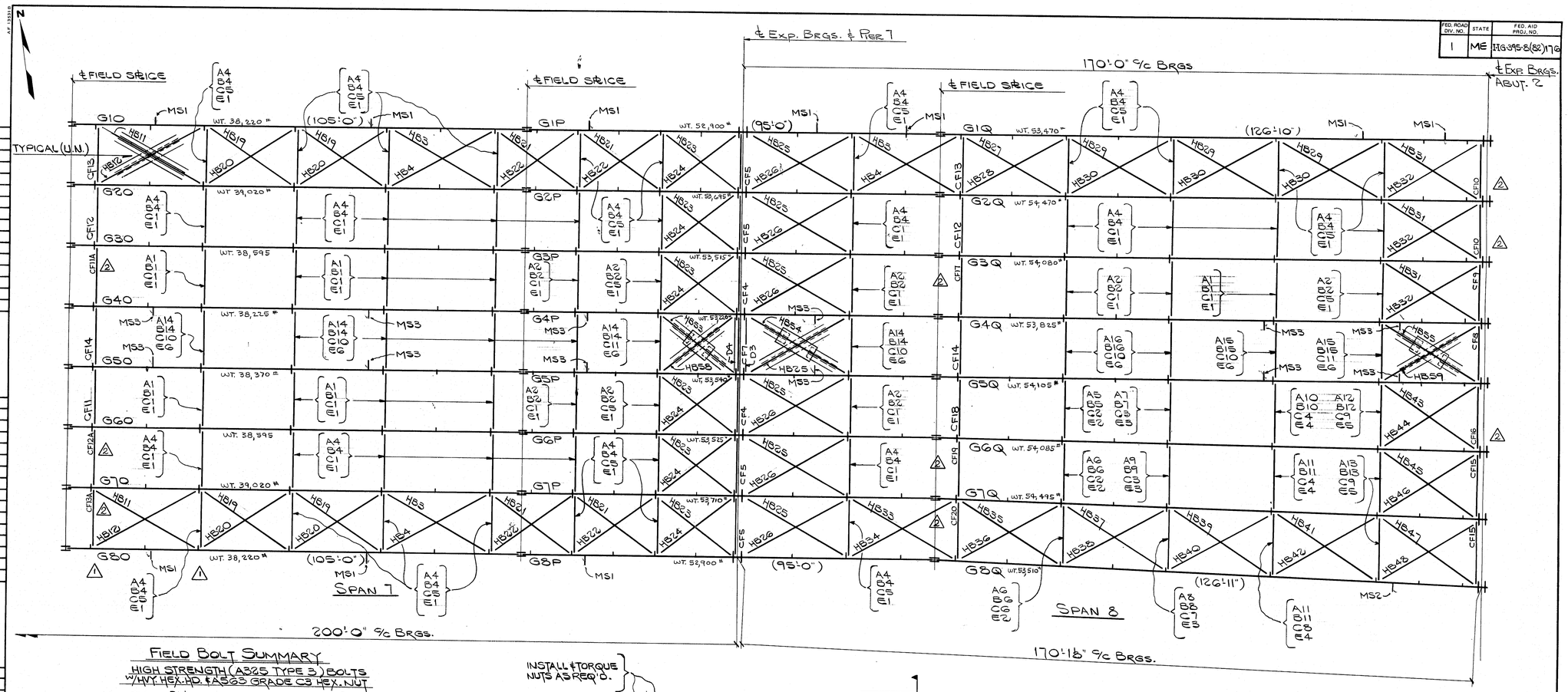

Field Bolt Summary

High Strength (A325 Type 3) Bolts w/Hvy. Hex. Hd. & A563 Grade C3 Hex. Nut

640 - 7/8"φ H.S. Bolts	x 0'-2" Lg.
5750 -	x 0'-2¼" Lg.
570 -	x 0'-2½" Lg.
520 -	x 0'-2¾" Lg.
5635 -	x 0'-3" Lg.
135 -	x 0'-3½" Lg.
400 -	x 0'-3¾" Lg.
640 -	x 0'-4" Lg.
470 -	x 0'-4¼" Lg.
235 -	x 0'-4½" Lg.
400 - 7/8"φ H.S. Bolts	x 0'-4¾" Lg.

15,395 - Hard. Flat Wash for 7/8"φ H.S. Bolts (F436 Weathering)

165 - Hex. Nuts for 1"φ H.S. Bolts (A563 Gr C3)
165 - Hard Flat Wash for 1"φ H.S. Bolts (F436 Weathering)
} For Handrail at Field Splices

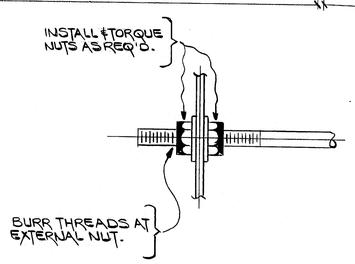

Handrail Termination

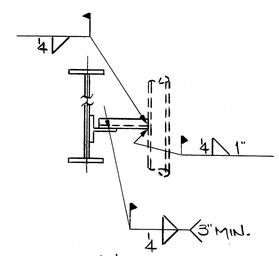

Field Weld for Scupper Angles

Work this dwg. with dwgs. E2 & E4.

NO.	REVISION	DATE
2	Changed Mark Location	6-12-85
1	Moved Constr. Joint Control #15	11-19-84

HIGH STEEL STRUCTURES, INC.
1905 Old Philadelphia Pike
Lancaster, Pennsylvania 17603
Phone 717/299-5211
A Subsidiary of High Industries Inc

Erection Plan
I-395 Bridge over Penobscot River
I-395 Bridge Sta. 164+60.00
Penobscot County
State of Maine
Department of Transportation

State Contract or Ref. No. G Contractor Cianbro Corp.
In Charge Hinkle Made by: CS Chk.d by: JLC Date 9-26-84
Contract Number ME-84088-3 Drawing Number E3

R95-167

FED. ROAD DIV. NO.	STATE	FED. AID PROJ. NO.
1	ME	I-IG-395-8(82)76

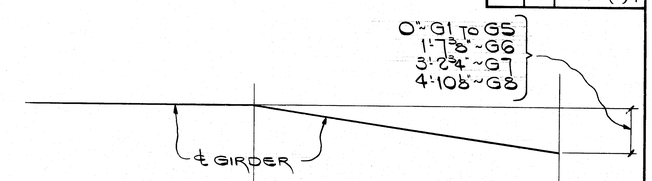

HORIZONTAL BENDING DIAGRAM

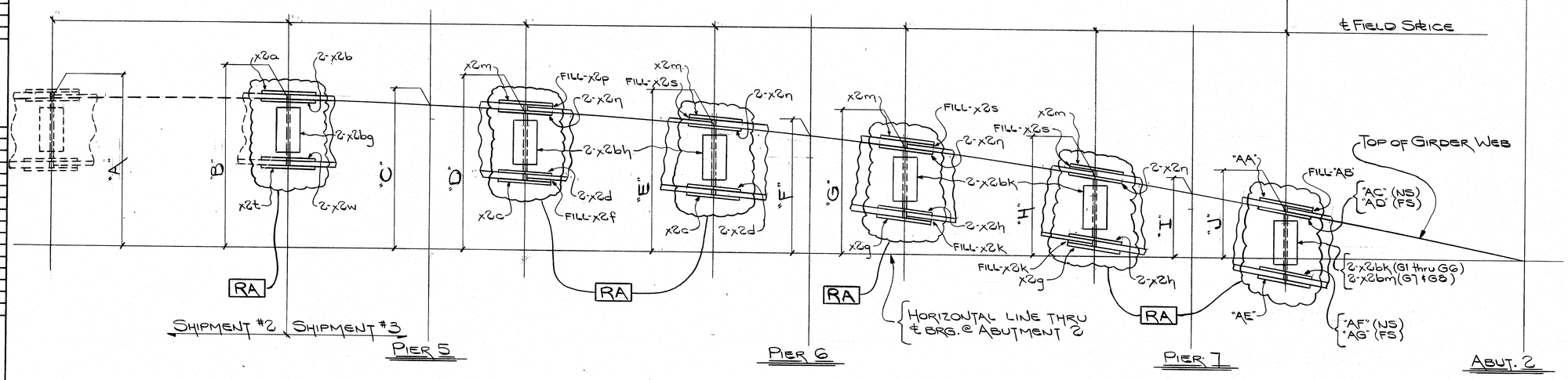

REAM ASSEMBLY DIAGRAM

GIRDER	"A"	"B"	"C"	"D"	"E"	"F"	"G"	"H"	"I"	"J"
G1	16'-0 5/8"	15'-9 5/8"	14'-7 1/2"	13'-10 3/8"	11'-10 7/16"	10'-9 3/16"	9'-9 1/4"	6'-10 1/16"	5'-2 5/8"	3'-10 15/16"
G2	16'-1 3/8"	15'-9 5/8"	14'-7 1/2"	13'-10 3/8"	11'-10 7/16"	10'-9 3/16"	9'-9 1/4"	6'-10 1/16"	5'-2 5/8"	3'-10 15/16"
G3	16'-2 15/16"	15'-9 1/4"	14'-7 1/2"	13'-10 15/16"	11'-10 1/2"	10'-9 3/16"	9'-9 1/4"	6'-10 1/16"	5'-2 5/8"	3'-11"
G4	16'-8 1/16"	15'-9 3/8"	14'-7 3/4"	13'-11 1/8"	11'-10 11/16"	10'-9 3/8"	9'-9 7/16"	6'-10 3/16"	5'-2 1/4"	3'-11"
G5	16'-8 1/16"	15'-9 1/4"	14'-7 3/8"	13'-11 1/8"	11'-10 1/16"	10'-9 3/16"	9'-9 1/4"	6'-9 15/16"	5'-2 5/8"	3'-11 1/4"
G6	16'-9 7/16"	15'-9 1/16"	14'-7 5/16"	13'-11 3/8"	11'-11"	10'-9 3/8"	9'-9 3/8"	6'-10 5/16"	5'-2 3/8"	3'-11 1/8"
G7	17'-3 1/8"	15'-10 5/8"	14'-8 5/16"	13'-11 3/4"	11'-11 3/8"	10'-10"	9'-10"	6'-10 3/4"	5'-3"	4'-0 1/16"
G8	17'-8 15/16"	15'-11 1/16"	14'-8 3/8"	14'-0 5/16"	11'-11 3/8"	10'-10 9/16"	9'-10 1/2"	6'-11 1/4"	5'-3 1/2"	4'-0 9/16"

FIELD SPLICE MARKS							
GIRDER	"AA"	"AB"	"AC"	"AD"	"AE"	"AF"	"AG"
G1	x2g	x2k	x2h	x2h	x2c	x2d	x2d
G2	↕	↕	↕	↕	↕	↕	↕
G3	↕	↕	↕	↕	↕	↕	↕
G4	↕	↕	↕	↕	↕	↕	↕
G5	x2g	x2k	x2h	x2h	x2c	x2d	x2d
G6	x2y	x2ac	x2ab	x2aa	x2as	x2aw	x2at
G7	x2ad	x2ah	x2ag	x2af	x2ay	x2bb	x2ba
G8	x2ak	x2ap	x2an	x2am	x2bc	x2bf	x2bd

WORK THIS DWG. WITH DWGS. E2 & E3

NO.	REVISION	DATE

HIGH STEEL STRUCTURES, INC.
1905 Old Philadelphia Pike
Lancaster, Pennsylvania 17603
Phone 717/299-5211
A Subsidiary of High Industries, Inc.

REAM ASSEMBLY DIAGRAM
I-395 BRIDGE OVER PENOBSCOT RIVER
I-395 BRIDGE STA. 164+60.00
PENOBSCOT COUNTY
STATE OF MAINE
DEPARTMENT OF TRANSPORTATION

STATE CONTRACT OR REF. NO. 6 CONTRACTOR CIANBRO CORP.
IN CHARGE: HINKLE MADE BY: CS CHK.D. BY: JLC DATE: 9-25-84
CONTRACT NUMBER: ME-84088-3 DRAWING NUMBER: E4

R95-168

FED.ROAD DIV.NO.	STATE	FED.AID PROJ.NO.
1	ME.	I-IG-395-8(821)176

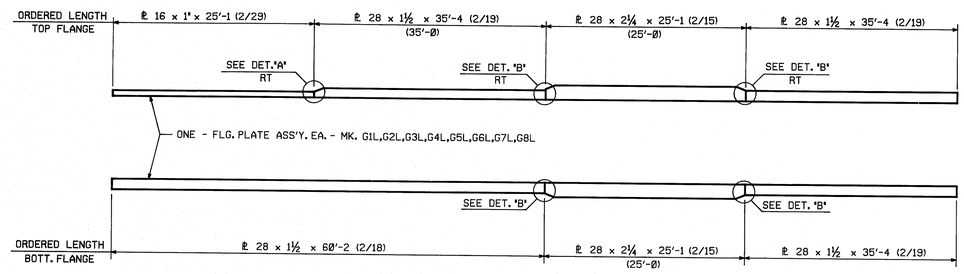

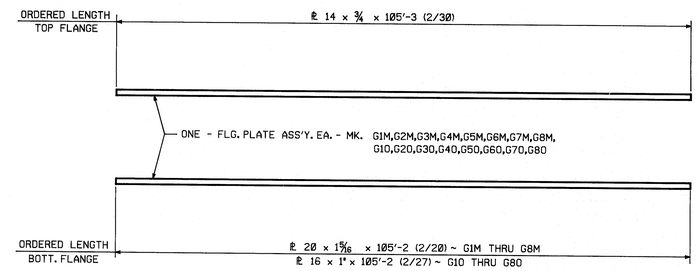

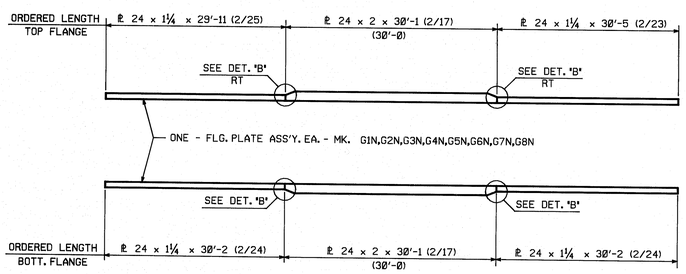

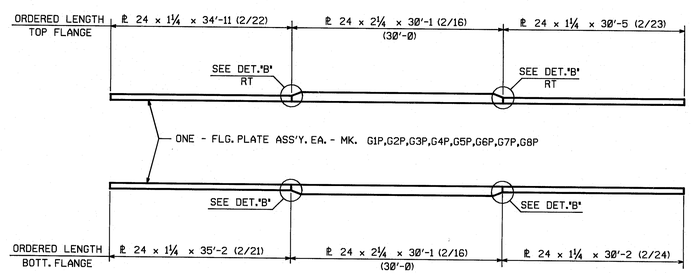

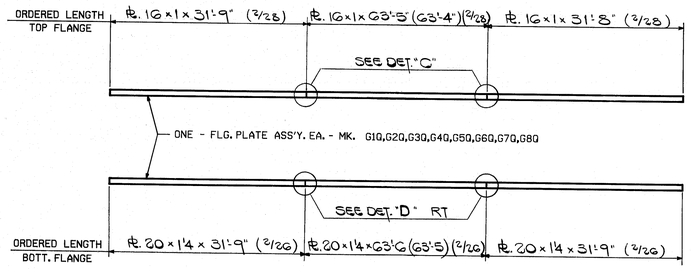

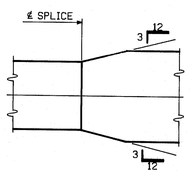

PLAN VIEW AT FLG. TRANSITION

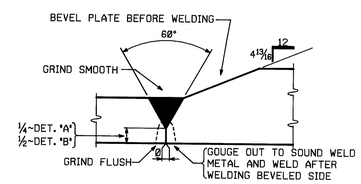

DETAIL "A" & "B"
(B-L2c-S)
W22X

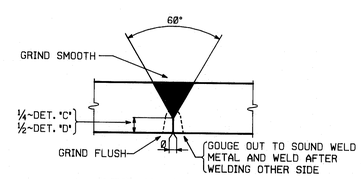

DETAIL "C" & "D"
(B-L2c-S)
W22X

NOTES:

FOR GENERAL NOTES, SEE DRAWING N1.
ALL STEEL TO BE ASTM A588,
WITH CHARPY V-NOTCH TEST REQUIRED.
RT INDICATES SPLICES TO BE 100% RADIOGRAPHICALLY TESTED.
TEST RANDOM 25% OF REMAINDER.
TESTING TO BE DONE BY A QUALIFIED TECHNICIAN IN
THE PRESENCE OF AN INSPECTOR.
DIMENSIONS SHOWN THUS (25'-0) ARE THE ACTUAL DIMENSIONS
THAT WILL APPEAR ON THE GIRDER DETAIL DRAWINGS.

NO.	REVISION	DATE

HIGH STEEL STRUCTURES, INC.
1905 Old Philadelphia Pike
Lancaster, Pennsylvania 17603
Phone 717/299-5231
A Subsidiary of High Industries, Inc.

FLANGE SPLICE DETAILS
I-395 BRIDGE OVER PENOBSCOT RIVER
I-395 BRIDGE STA. 164+60.00
PENOBSCOT COUNTY
STATE OF MAINE
DEPARTMENT OF TRANSPORTATION

STATE CONTRACT OR REF.NO. 6 CONTRACTOR CIANBRO CORP.
IN CHARGE: HINKLE MADE BY: S.J.A. CHK.D. BY: JLC DATE: 9-17-84
CONTRACT NUMBER: ME-84088-3 DRAWING NUMBER: FS1

R95-169

CODE: 4000

FED.ROAD DIV.NO.	STATE	FED.AID PROJ.NO.
1	ME.	I-IG-395-8(82)176

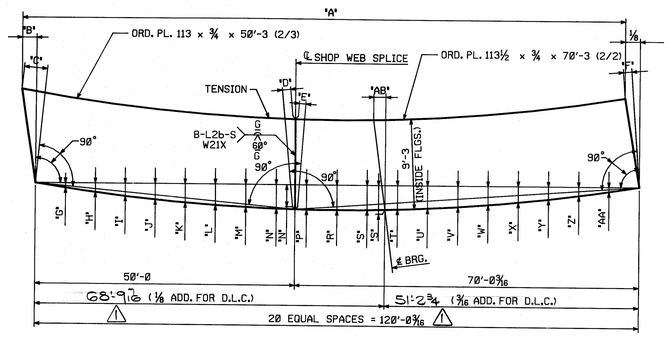

CAMBER DIAGRAM-G1L,G2L,G3L,G4L,G5L,G6L&G7L

MARK	'A'	'B'	'C'	'D'	'E'	'F'	'G'	'H'	'I'	'J'	'K'	'L'	'M'	'N'	'P'	'R'	'S'	'T'	'U'	'V'	'W'	'X'	'Y'	'Z'	'AA'	'AB'
G1L	120'-0¼	3/16	5/16	1/16	⅛	1/16	0'	1/16	1/16	3/16	¼	5/16	7/16	½	9/16	⅝	⅝	⅝	⅝	9/16	½	7/16	5/16	3/16	⅛	1⅝
G2L	120'-0 3/16	⅛	¼	1/16	⅛	1/16	0'	1/16	1/16	3/16	¼	⅜	7/16	½	9/16	⅝	11/16	11/16	⅝	⅝	9/16	7/16	5/16	3/16	⅛	1⅝
G3L	120'-0 3/16	⅛	¼	1/16	⅛	1/16	0'	1/16	1/16	3/16	¼	⅜	7/16	9/16	⅝	11/16	11/16	11/16	11/16	⅝	9/16	7/16	5/16	¼	⅛	1⅝
G4L	120'-0⅛	1/16	3/16	1/16	⅛	1/16	0'	0'	1/16	⅛	3/16	5/16	7/16	½	9/16	⅝	11/16	11/16	⅝	⅝	½	7/16	5/16	3/16	⅛	1⅝
G5L	120'-0⅛	1/16	3/16	1/16	⅛	1/16	0'	0'	1/16	⅛	¼	5/16	7/16	½	⅝	⅝	11/16	11/16	⅝	⅝	9/16	7/16	5/16	3/16	⅛	1⅝
G6L	120'-0⅛	1/16	3/16	1/16	⅛	1/16	0'	0'	1/16	3/16	¼	⅜	½	9/16	⅝	11/16	¾	¾	11/16	⅝	9/16	½	⅜	¼	⅛	1 11/16
G7L	120'-0 1/16	0'	⅛	⅛	⅛	0'	0'	1/16	3/16	¼	⅜	9/16	11/16	¾	13/16	13/16	13/16	13/16	¾	11/16	⅝	½	⅜	¼	⅛	1 11/16

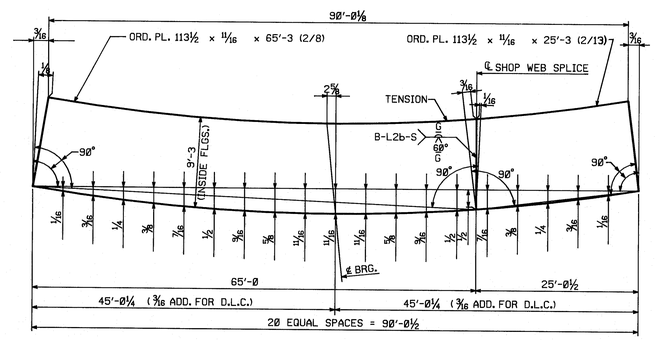

CAMBER DIAGRAM-G1N,G2N,G3N,G4N,G5N,G6N,G7N,G8N

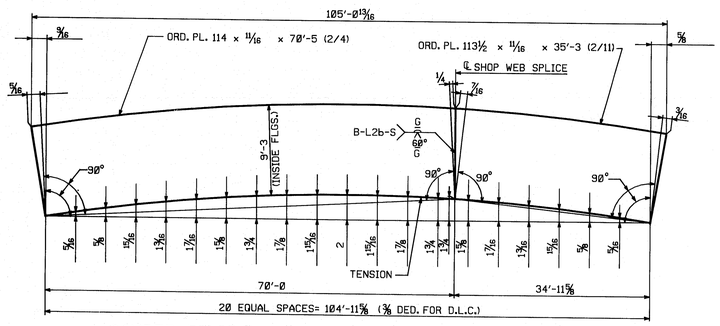

CAMBER DIAGRAM-G1M,G2M,G3M,G4M,G5M,G6M,G7M,G8M

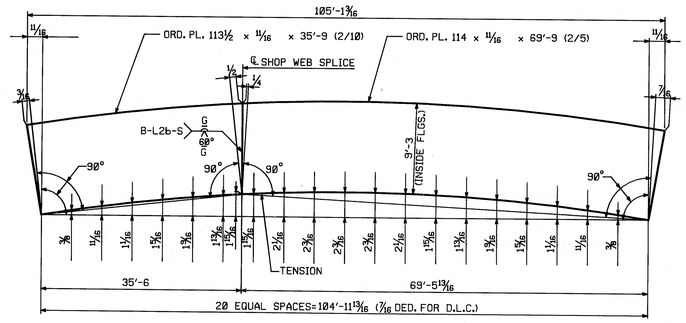

CAMBER DIAGRAM-G1O,G2O,G3O,G4O,G5O,G6O,G7O,G8O

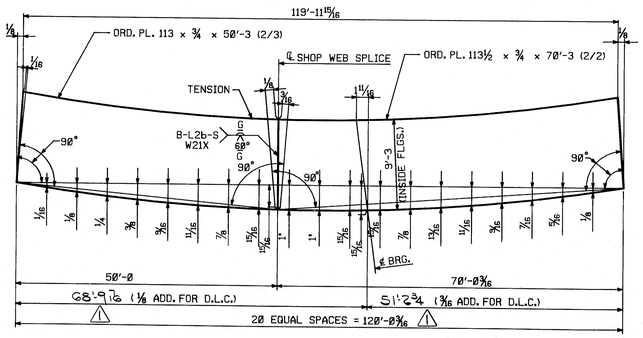

CAMBER DIAGRAM-G8L

NOTES:

FOR GENERAL NOTES, SEE DRAWING N1.
ALL STEEL TO BE ASTM A588 WITH CHARPY V-NOTCH TEST.
RADIOGRAPHICALLY TEST 1/6 THE DEPTH OF THE WEB AT THE TENSION EDGE + 25%, AT RANDOM, OF THE REMAINDER.
TESTING TO BE DONE BY A QUALIFIED TECHNICIAN IN THE PRESENCE OF THE INSPECTOR.
SHOP INSPECTION BY MAINE D.O.T., OR THEIR REPRESENTATIVE.

NO.	REVISION	DATE
1	Revised span length Control #16	1-12-85

HIGH STEEL STRUCTURES, INC.
1905 Old Philadelphia Pike
Lancaster, Pennsylvania 17603
Phone 717/299-521
A Subsidiary of High Industries, Inc.

WEB CAMBER DIAGRAMS
I-395 BRIDGE OVER PENOBSCOT RIVER
I-395 BRIDGE STA. 164+60.00
PENOBSCOT COUNTY
STATE OF MAINE
DEPARTMENT OF TRANSPORTATION

STATE CONTRACT OR REF.NO. 6 CONTRACTOR CIANBRO CORP.
IN CHARGE: HINKLE MADE BY: S.J.A. CHK.D. BY: JLC DATE: 9-17-84
CONTRACT NUMBER: ME-84088-3 DRAWING NUMBER: WC1

CODE: 4000

R95-170

FED.ROAD DIV.NO.	STATE	FED.AID PROJ.NO.
1	ME.	I-IG-395-8(82)176

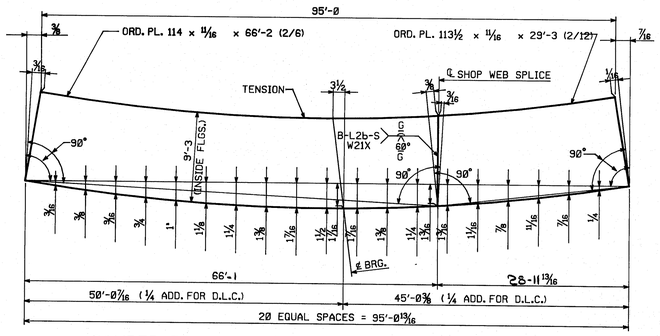

CAMBER DIAGRAM-G1P,G2P,G3P,G4P,G5P,G6P,G7P,G8P

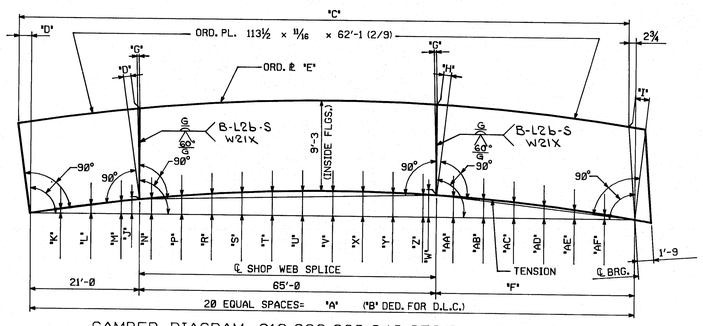

CAMBER DIAGRAM- G1Q,G2Q,G3Q,G4Q,G5Q,G6Q,G7Q,G8Q

MARK	'A'	'B'	'C'	'D'	'E'	'F'	'G'	'H'	'I'	'J'	'K'	'L'	'M'	'N'	'P'	'R'	'S'	'T'	'U'	'V'	'W'	'X'	'Y'	'Z'	'AA'	'AB'	'AC'	'AD'	'AE'	'AF'
G1Q	125'-0	3/16	124'-9¾	½	113½x11/16x65'-3 (2/8)	39'-0	1/16	7/16	3 3/16	1 3/16	5/16	5/8	15/16	1¼	1½	1 11/16	1⅞	2	2 1/16	2⅛	1 9/16	2 1/16	2	1⅞	1 11/16	1½	1¼	15/16	5/8	5/16
G2Q	125'-0	3/16	124'-9¾	½	113½x11/16x65'-3 (2/8)	39'-0	1/16	7/16	3 7/16	1 3/16	⅜	11/16	1'	1¼	1½	1 11/16	1 15/16	2 1/16	2 3/16	2⅛	1 13/16	2⅛	2 1/16	1 15/16	1¾	1½	1¼	15/16	5/8	5/16
G3Q	125'-0	3/16	124'-9¾	½	113½x11/16x65'-3 (2/8)	39'-0	1/16	½	3 7/16	1¼	5/16	11/16	1'	1¼	1 9/16	1¾	1 15/16	2 1/16	2⅛	2 3/16	1 7/8	2⅛	2 1/16	1⅞	1¾	1½	1¼	15/16	5/8	5/16
G4Q	125'-0	3/16	124'-9¾	½	113½x11/16x65'-3 (2/8)	39'-0	1/16	½	3 3/16	1¼	5/16	5/8	1'	1 5/16	1 9/16	1 13/16	1 15/16	2 1/16	2 3/16	2 3/16	1 7/8	2⅛	2⅛	2	1⅞	1½	1¼	15/16	5/8	5/16
G5Q	124'-11⅞	11/16	124'-9¾	5/8	113½x11/16x65'-3 (2/8)	38'-11⅞	1/8	½	3¼	1 7/16	⅜	¾	1⅛	1½	1¾	2	2¼	2⅜	2 7/16	2 5/16	2 3/16	2 3/16	2⅜	2¼	2 1/16	1¾	1 7/16	1⅛	¾	⅜
G6Q	124'-11 15/16	11/16	124'-9 13/16	5/8	114x11/16x65'-3 (2/7)	38'-11 15/16	1/8	7/16	3¼	1 5/16	½	15/16	1 5/16	1½	1¾	2	2¼	2⅜	2½	2 5/16	2	2¼	2 5/16	2 3/16	2	1 11/16	1 7/16	1⅛	¾	⅜
G7Q	125'-0⅜	11/16	124'-10¼	5/8	114x11/16x65'-3 (2/7)	39'-0⅜	1/8	½	3¼	1⅜	5/16	11/16	1 11/16	1½	1¾	2	2 1/16	2 3/16	2¼	2 7/16	2 1/16	2⅜	2 5/16	2⅛	1 15/16	1¾	1 7/16	1⅛	¾	⅜
G8Q	125'-0 15/16	11/16	124'-10⅞	11/16	113½x11/16x65'-3 (2/8)	39'-0 15/16	3/16	7/16	3¼	1 7/16	5/16	¾	1⅛	1½	1¾	2	2 3/16	2 5/16	2 7/16	2 5/16	2 3/16	2 5/16	2 7/16	2¼	2 1/16	1 11/16	1 7/16	1 1/16	¾	⅜

NOTES:

FOR NOTES, SEE DRAWING WC1.

R95-171

CODE: 4000

NO.	REVISION	DATE

HIGH STEEL STRUCTURES, INC.

1905 Old Philadelphia Pike
Lancaster, Pennsylvania 17603
Phone 717/299-325
A Subsidiary of High Industries, Inc.

WEB CAMBER DIAGRAMS
I-395 BRIDGE OVER PENOBSCOT RIVER
I-395 BRIDGE STA. 164+60.00
PENOBSCOT COUNTY
STATE OF MAINE
DEPARTMENT OF TRANSPORTATION

STATE CONTRACT OR REF.NO. 6 CONTRACTOR CIANBRO CORP.

IN CHARGE: HINKLE MADE BY: S.J.A. CHK.D. BY: JLC DATE: 9-17-84

CONTRACT NUMBER: ME-84088-3 DRAWING NUMBER: WC2

FED. ROAD DIV. NO.	STATE	FED. AID PROJ. NO.
1	ME	I-IG-395-8(82)116

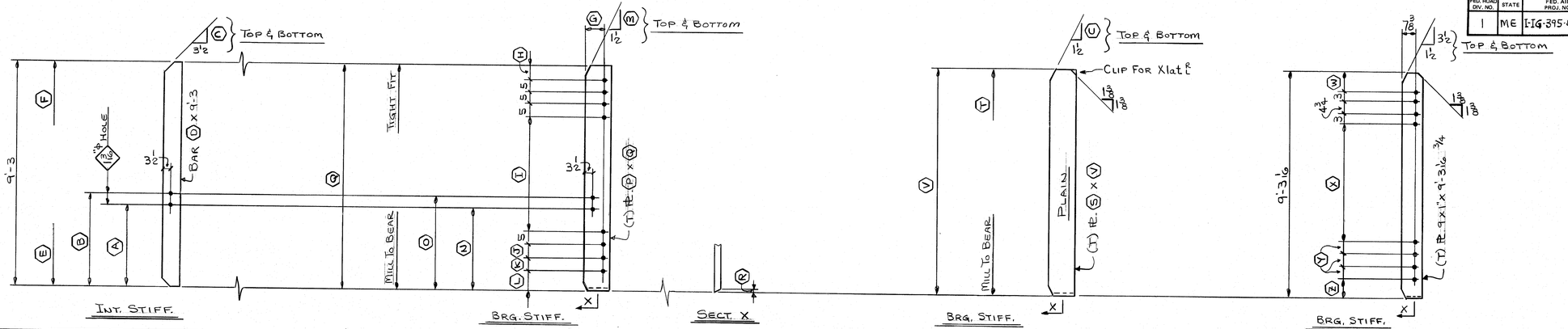

REQ'D.	MK.	A	B	C	D	E	F
8	x1a	–	3'-9	4½	6x1 3/16 3/7	TIGHT FIT	–
8	x1b	–	3'-9		6x 9/16 3/8	TIGHT FIT	TIGHT FIT
8	x1c	3'-6	–		6x 9/16 3/7	–	
8	x1d	3'-6	3'-9		5x½ 3/11	–	
8	x1f	–	3'-9	4½	3/11	–	
24	x1g	3'-6	–	3½	3/12	TIGHT FIT	
24	x1h	3'-6	3'-9		3/11	–	
8	x1k	3'-6	–			–	
8	x1m	–	3'-9			–	TIGHT FIT
24	x1n	3'-6	–			TIGHT FIT	–
16	x1p	–	3'-9			TIGHT FIT	–
8	x1s	–	–		3/11	TIGHT FIT	–
24	x1t	–	3'-9		5x½ 3/12	TIGHT FIT	TIGHT FIT
8	x1w	–	–	3½	7x⅝ 3/5	TIGHT FIT	–
8	x1y	–	3'-9	4½	7x 9/16 3/6	TIGHT FIT	TIGHT FIT
△6	x1bn	–	–	3½	10x⅜ 3/13	TIGHT FIT	–

REQ'D.	MK.	G	H	I	J	K	L	M	N	O	P	Q	R
4	x1aa	10½	4	5'-6 11/16	5	5	10 5/16	4½	3'-6	–	12x1⅛	9'-3 3/2	0"
4	x1ab		6 5/16	5'-6 11/16			8			–			
8	x1ac		4	5'-5½			11½			–			
8	x1ad	10½	7½	5'-5½			8	4½		–	12x1⅛	9'-3 3/2	0"
2	x1af R	8½	4	5'-6 11/16			10 3/8	3½		3'-9	10x1"	9'-3 1/16 3/3	1/32
2	x1af L												
2	x1ag R		6 5/16	5'-6 11/16			8 1/16						
2	x1ag L												
8	x1ah R		4	5'-5½			11 9/16						
8	x1ah L												
8	x1ak R		7½	5'-5½			8 1/16						
8	x1ak L												
2	x1am R		4	5'-6 9/16			10½						
2	x1am L												
2	x1an R	8½	6 7/16	5'-6 9/16	5	5	8 1/16	3½	3'-6	3'-9	10x1"	9'-3 1/16 3/3	1/32
2	x1an L												
2	x1ap	10½	4	5'-10	5½	3	8½	4½	–	–	12x1⅛	9'-3 3/2	0"
4	x1as	8½	4	5'-10	5½	3	8 9/16	3½	–	–	10x1"	9'-3 1/16 3/3	1/32
4	x1by	8½	4	5'-10	5½	3	8 9/16	3½	3'-6	3'-9	10x1"	9'-3 1/16 3/3	1/32
2	x1bw	10½	4	5'-10	5½	3	8½	4½	3'-6	–	12x1⅛	9'-3 3/2	0"

△ OPP. HAND

REQ'D.	MK.	R	S	T	U	V
9	x1at R	1/32	9x1"	–	3½	9'-3 1/16 3/4
9	x1at L					
4	x1aw	0"	12x1⅛	TIGHT FIT	4½	9'-3 3/2
4	x1ay R	1/32	10x1"	TIGHT FIT	3½	9'-3 1/16 3/3
4	x1ay L					

NOTE	REQ'D.	MK.	R	W	X	Y	Z
△5	4	x1ba R	1/32	6½"	6'-4¼"	3"	8 9/16"
△5	4	x1ba L			6'-4¼"	3"	8 9/16"
	ONE	x1bc			6'-1¾"	3"	11⅛"
OPP. HAND	2	x1bf			6'-0¾"	3"	1'-0⅛"
	2	x1bh			5'-7¾"	5"	11⅛"
OPP. HAND	ONE	x1bm	1/32	6½"	5'-9¾"	5"	9⅛"

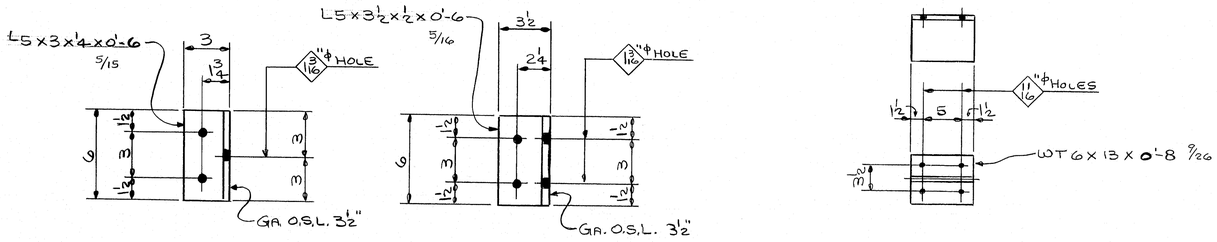

△155 - ANGLES - MK X1bp

△20 - ANGLES - MK. X1bs

47 - SCUPPER CONN. - MK. X1bt

SHOP NOTE

HOLES: 1 1/16" ϕ (U.N.)
BOLTS: NONE
PAINT: NONE

FOR GENERAL NOTES SEE DWG. N1.
ALL STEEL TO BE A.S.T.M. A588.
(T) INDICATES CHARPY V-NOTCH TEST REQ'D.

R95-172

CODE: 4000

NO.	REVISION	DATE
△8	construction joint moved	11-19-84
△1	REVISION CONTR. REV. - CONTROL 14	9/7/84

HIGH STEEL STRUCTURES, INC.
1905 Old Philadelphia Pike
Lancaster, Pennsylvania 17603
Phone 717/299-5211
A Subsidiary of High Industries, Inc.

JOB STANDARDS
I-395 BRIDGE OVER PENOBSCOT RIVER
I-395 BRIDGE STA. 164+60.00
PENOBSCOT COUNTY
STATE OF MAINE
DEPARTMENT OF TRANSPORTATION

STATE CONTRACT OR REF. NO. 6 CONTRACTOR CIANBRO CORP.
IN CHARGE: HINKLE MADE BY: G.F.Z. CHK.D. BY: JLC DATE: 9-19-84
CONTRACT NUMBER: ME-84088-3 DRAWING NUMBER: X1

FED. ROAD DIV. NO.	STATE	FED. AID PROJ. NO.
1	ME	I-IG-395-8(82)176

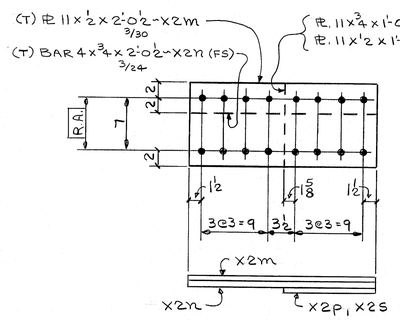

32 - SPLICE PLS. - MK. X2m
64 - SPLICE PLS. - MK. X2n
8 - FILL PLS. - MK. X2p
24 - FILL PLS. - MK. X2s

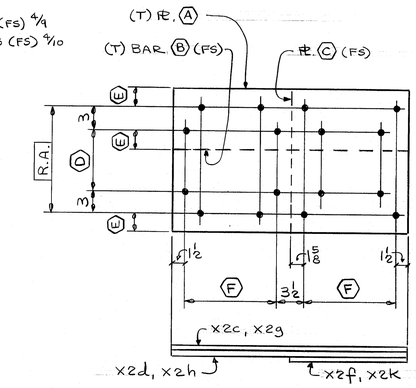

REQ'D.	MK.	A	B	C	D	E	F
21	X2c	19 x 1/16 x 2'-6 1/2 3/26	—	—	8	2 1/2	6@2=1'-0
42	X2d	—	8 x 7/8 x 2'-6 1/2 3/20	—	-	2 1/2	6@2=1'-0
8	X2f	—	—	19 x 3/16 x 1'-3 1/8 9/13	8	2 1/2	6@2=1'-0
21	X2g	15 x 9/16 x 1'-10 1/2 3/28	—	—	6	1 1/2	4@2=8
42	X2h	—	6 x 3/4 x 1'-10 1/2 3/23	—	-	1 1/2	4@2=8
21	X2k	—	—	15 x 1/4 x 0'-11 1/8 9/12	6	1 1/2	4@2=8

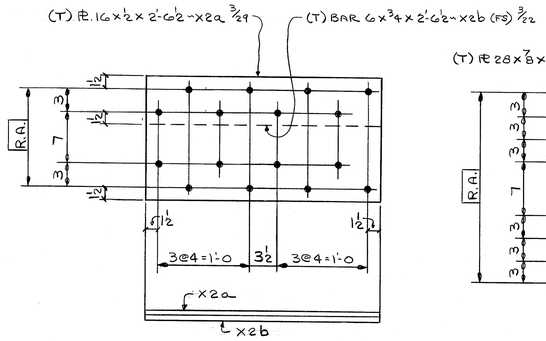

8 - SPLICE PLS. - MK. X2a
16 - SPLICE PLS. - MK. X2b

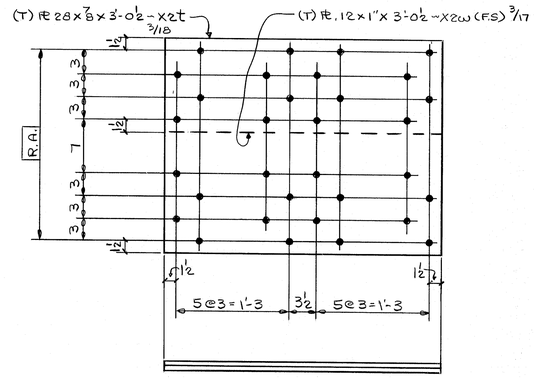

8 - SPLICE PLS. - MK. X2t
16 - SPLICE PLS. - MK. X2w

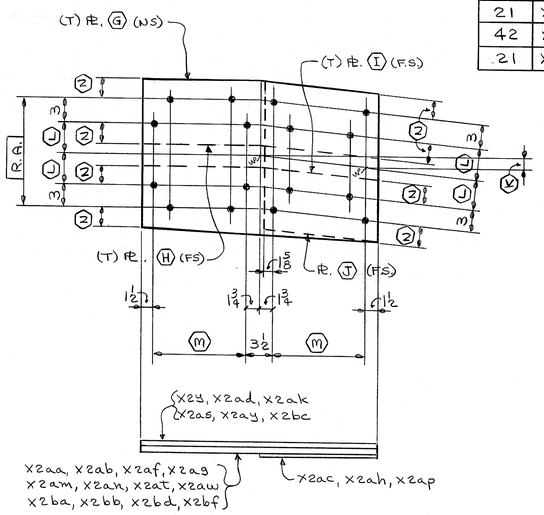

SEE SCHEDULE @ RIGHT

REQ'D.	MK.	G	H	I	J	K	L	M	N
ONE	X2y	15 5/16 x 9/16 x 1'-10 1/2 3/27	—	—	—	1/8	3	4@2=8	1 1/2
	X2aa	—	—	—	—				
	X2ab	—	—	6 7/16 x 3/4 x 1'-10 1/2 3/21	—				
	X2ac	—	—	—	15 3/16 x 1/4 x 0'-11 1/8 9/11	1/8			
	X2ad	15 5/16 x 9/16 x 1'-10 1/2 3/27	—	—	—	1/4			
	X2af	—	6 7/16 x 3/4 x 1'-10 1/2 3/21	—	—				
	X2ag	—	—	6 5/16 x 3/4 x 1'-10 1/2 3/21	—				
	X2ah	—	—	—	15 5/16 x 1/4 x 0'-11 1/8 9/11	1/4			
	X2ak	15 7/16 x 9/16 x 1'-10 1/2 3/27	—	—	—	3/8			
	X2am	—	6 7/16 x 3/4 x 1'-10 1/2 3/21	—	—				
	X2an	—	—	6 7/16 x 3/4 x 1'-10 1/2 3/21	—				
	X2ap	—	—	—	15 7/16 x 1/4 x 0'-11 1/8 9/11	3/8	3	4@2=8	1 1/2
	X2as	19 1/4 x 1/16 x 2'-6 1/2 3/25	—	—	—	3/16	4	6@2=1'-0	2 1/2
	X2at	—	8 1/4 x 7/8 x 2'-6 1/2 3/19	—	—	3/16			
	X2aw	—	—	8 1/4 x 7/8 x 2'-6 1/2 3/19	—	3/16			
	X2ay	19 7/16 x 1/16 x 2'-6 1/2 3/25	—	—	—	3/8			
	X2ba	—	8 7/16 x 7/8 x 2'-6 1/2 3/19	—	—	3/8			
	X2bb	—	—	8 7/16 x 7/8 x 2'-6 1/2 3/19	—	3/8			
	X2bc	19 9/16 x 1/16 x 2'-6 1/2 3/25	—	—	—	1/2			
	X2bd	—	8 9/16 x 7/8 x 2'-6 1/2 3/19	—	—	1/2			
ONE	X2bf	—	—	8 9/16 x 7/8 x 2'-6 1/2 3/19	—	1/2	4	6@2=1'-0	2 1/2

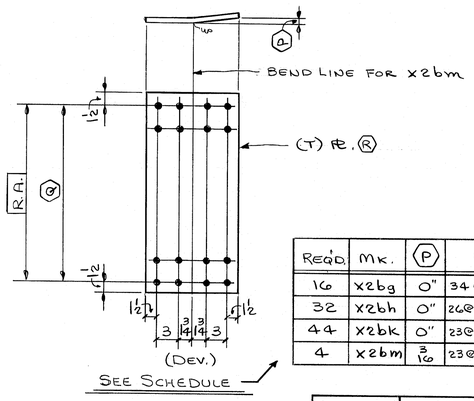

SEE SCHEDULE

REQ'D.	MK.	P	Q	R
16	X2bg	0"	34@3=8'-6	105 x 1/2 x 1'-0 1/2 4/5
32	X2bh	0"	26@4=8'-8	107 x 1/2 x 1'-0 1/2 4/2
44	X2bk	0"	23@4 1/2=8'-7 1/2	106 1/2 x 1/2 x 1'-0 1/2 4/3
4	X2bm	3/16	23@4 1/2=8'-7 1/2	106 1/2 x 1/2 x 1'-0 1/2 4/4

SHOP NOTE

HOLES: R.A.
BOLTS: NONE
PAINT: NONE

FOR GENERAL NOTES SEE DWG. N1.
ALL STEEL TO BE A.S.T.M. A 588.
(T) INDICATES CHARPY V-NOTCH TEST REQ'D.

R95-173

CODE : 4000

NO.	REVISION	DATE

HIGH STEEL STRUCTURES, INC.
1905 Old Philadelphia Pike
Lancaster, Pennsylvania 17603
Phone 717/299-5211
A Subsidiary of High Industries, Inc.

JOB STANDARDS
I-395 BRIDGE OVER PENOBSCOT RIVER
I-395 BRIDGE STA. 164 + 60.00
PENOBSCOT COUNTY
STATE OF MAINE
DEPARTMENT OF TRANSPORTATION

STATE CONTRACT OR REF. NO. 6 CONTRACTOR TANBRO CORP.
IN CHARGE: HINKLE MADE BY: G.F.Z. CHK.D. BY: JLC DATE: 9-21-84
CONTRACT NUMBER: ME-84088-3 DRAWING NUMBER: X2

FED. ROAD DIV. NO.	STATE	FED. AID PROJ. NO.
1	ME	IIG-395-8(82)174

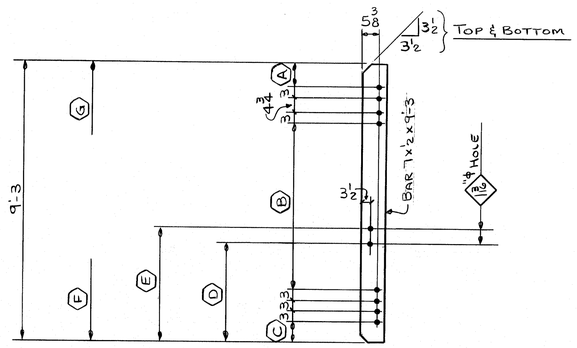

CONN. STIFF.

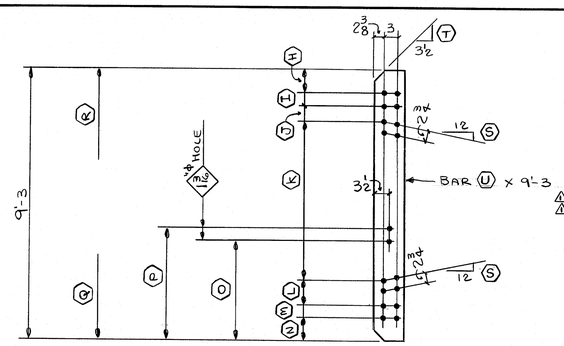

CONN. STIFF.

REQ'D.	MK.	A	B	C	D	E	F	G	ITEM
2	x3b	6 1/8"	6'-11 15/16"	10 15/16"	3'-6"	3'-9"	TIGHT FIT	TIGHT FIT	3/10
6	x3d		6'-0 3/4"	1'-0"	3'-6"	3'-9"			3/10
2	x3g		6'-11 15/16"	10 15/16"	3'-6"	3'-9"			3/10
2	x3k		6'-0 3/8"	11 3/8"	3'-6"	3'-9"			3/10
2	x3m		6'-4 1/4"	8 1/2"	–	–		TIGHT FIT	3/10
2	x3p		6'-11 15/16"	10 15/16"	3'-6"	3'-9"		–	3/9
4	x3t		6'-0 3/4"	1'-0"	3'-6"	3'-9"		–	3/9
ONE	x3w		6'-4 1/4"	8 1/2"	–	–		–	3/9
14	x3gd		6'-4 1/4"	8 1/2"	3'-6"	3'-9"		TIGHT FIT	3/10
7	x3gp	6 1/8"	6'-4 1/4"	8 1/2"	3'-6"	3'-9"	TIGHT FIT	–	3/9

REQ'D.	MK.	H	I	J	K	L	M	N	O	P	Q	R	S	T	U
4	x3y	9 5/8	2 3/4	4 7/8	6'-2 1/2	7 7/8	2 3/4	8 5/8	–	3'-9	TIGHT FIT	TIGHT FIT	5 1/2	4 1/2	7x 9/16 3/16
4	x3aa	6 1/8			6'-2 1/2			1'-0 1/8	–				5 1/2		
2	x3ab	8 7/16			6'-3 11/16			8 5/8	–				5 9/16		
2	x3ac	6 1/8	2 3/4	4 7/8	6'-3 11/16	7 7/8	2 3/4	10 15/16	–	3'-9			5 9/16		
ONE	x3ad	5	5	5 1/4	6'-3	9 1/4	3	8 1/2	–	–			5 9/16		7x 9/16 3/16
ONE	x3ae								–	3'-9					
2	x3af	9 1/2	2 3/4	4 7/8	6'-2 5/8	7 7/8	2 3/4	8 5/8	–	3'-9			5 1/2		7x 1/2 3/10
	x3ag	6 1/8			6'-2 5/8			1'-0	–				5 1/2		
	x3ah	8 7/16			6'-3 11/16			8 5/8	–				5 9/16		
	x3ak	6 1/8			6'-3 11/16			10 15/16	–				5 9/16		
	x3am	9 5/8			6'-2 1/2			8 5/8	–				5 1/2		
2	x3an	6 1/8	2 3/4	4 7/8	6'-2 1/2	7 7/8	2 3/4	1'-0 1/8	–	3'-9			5 1/2		
ONE	x3ap	5	5	5 1/4	6'-3	9 1/4	3	8 1/2	–	–	TIGHT FIT		5 9/16		3/10
ONE	x3aq								–	3'-9					
8	x3as	9 5/8	2 3/4	4 7/8	6'-2 1/2	7 7/8	2 3/4	8 5/8	3'-6	3'-9	–		5 1/2		3/9
8	x3at	6 1/8			6'-2 1/2			1'-0 1/8			–		5 1/2		
4	x3aw	8 7/16			6'-3 11/16			8 5/8			–		5 9/16		
4	x3ay	6 1/8	2 3/4	4 7/8	6'-3 11/16	7 7/8	2 3/4	10 15/16	3'-6	3'-9	–		5 9/16		
2	x3ba	5	5	5 1/4	6'-3	9 1/4	3	8 1/2	–	–	–		5 9/16	4 1/2	3/9
2	x3bb								3'-6	3'-9					
12	x3bb	9 5/8	2 3/4	4 7/8	6'-2 1/2	7 7/8	2 3/4	8 5/8	3'-6	3'-9	TIGHT FIT		5 1/2	3 1/2	3/10
12	x3bc	6 1/8			6'-2 1/2			1'-0 1/8					5 1/2		
6	x3bd	8 7/16			6'-3 11/16			8 5/8					5 9/16		
6	x3bf	6 1/8	2 3/4	4 7/8	6'-3 11/16	7 7/8	2 3/4	10 15/16	3'-6	3'-9			5 9/16		
3	x3bg	5	5	5 1/4	6'-3	9 1/4	3	8 1/2	–	–		TIGHT FIT	5 9/16		3/10
3	x3bk								3'-6	3'-9					
6	x3bh	9 5/8	2 3/4	4 7/8	6'-2 1/2	7 7/8	2 3/4	8 5/8	3'-6	–		–	5 1/2		3/9
6	x3bk	6 1/8			6'-2 1/2			1'-0 1/8		–		–	5 1/2		
2	x3bm	8 7/16			6'-3 11/16			8 5/8		–		–	5 9/16		
2	x3bn	6 1/8	2 3/4	4 7/8	6'-3 11/16	7 7/8	2 3/4	10 15/16	3'-6	–		–	5 9/16		
5	x3bp	5	5	5 1/4	6'-3	9 1/4	3	8 1/2	–	–		–	5 9/16		
2	x3bq								3'-6	3'-9					
10	x3bs	9 5/8	2 3/4	4 7/8	6'-2 1/2	7 7/8	2 3/4	8 5/8	3'-6	3'-9		–	5 1/2		
10	x3bt	6 1/8			6'-2 1/2			1'-0 1/8				–	5 1/2		
4	x3bw	8 7/16			6'-3 11/16			8 5/8				–	5 9/16		
4	x3by	6 1/8	2 3/4	4 7/8	6'-3 11/16	7 7/8	2 3/4	10 15/16	3'-6	3'-9		–	5 9/16		
ONE	x3ca	5 1/4	5	5 1/4	6'-2 3/4	9 1/4	3	8 1/2	3'-6	–		–	5 1/2		
ONE	x3ce								3'-6	3'-9					
12	x3cb	9 5/8	2 3/4	4 7/8	6'-2 1/2	7 7/8	2 3/4	8 5/8	–	3'-9		–	5 1/2		
12	x3cc	6 1/8			6'-2 1/2			1'-0 1/8	–			–	5 1/2		
5	x3cd	8 7/16			6'-3 11/16			8 5/8	–			–	5 9/16		
5	x3cf	6 1/8	2 3/4	4 7/8	6'-3 11/16	7 7/8	2 3/4	10 15/16	–	3'-9		–	5 9/16		
2	x3cg	5	5	5 1/4	6'-2 3/4	9 1/4	3	8 3/4	–	–	TIGHT FIT	–	5 1/2	3 1/2	7x 1/2 3/9
2	x3gn	5	5	5 1/4	6'-3	9 1/4	3	8 1/2	–	3'-9	–	TIGHT FIT	5 9/16	3 1/2	7x 1/2 3/9

REQ'D.	MK.	H	I	J	K	L	M	N	O	P	Q	R	S	T	U
12	x3ch	9 5/8	2 3/4	4 7/8	6'-2 1/2	7 7/8	2 3/4	8 5/8	3'-6	–	–	TIGHT FIT	5 1/2	3 1/2	7x 1/2 3/9
12	x3ck	6 1/8			6'-2 1/2			1'-0 1/8		–	–		5 1/2		
2	x3cm	8 7/16			6'-3 11/16			8 5/8		–	–		5 9/16		
2	x3cn	6 1/8	2 3/4	4 7/8	6'-3 11/16	7 7/8	2 3/4	10 15/16	3'-6	–	–				
5	x3cp	5	5	5 1/4	6'-3	9 1/4	3	8 1/2	–	–	–				
3	x3gm								3'-6	–					
4	x3cs	8 9/16	2 3/4	4 7/8	6'-3 9/16	7 7/8	2 3/4	8 5/8	3'-6	–	–				
4	x3ct	6 1/8			6'-3 9/16			11 1/16	3'-6	–	–		5 9/16		
8	x3cw	9 5/8			6'-2 1/2			8 5/8	–	3'-9	–		5 1/2		
8	x3cy	6 1/8			6'-2 1/2			1'-0 1/8	–		–		5 1/2		
2	x3da	8 7/16			6'-3 11/16			8 5/8	–		–		5 9/16		
	x3db	6 1/8			6'-3 11/16			10 15/16	–		–				
	x3dc	8 9/16			6'-3 9/16			8 5/8	–		–				
	x3dd	6 1/8	2 3/4	4 7/8	6'-3 11/16	7 7/8	2 3/4	11 1/16	–	3'-9	–	TIGHT FIT	5 9/16		
	x3df	5 1/8	5	5 1/4	6'-2 7/8	9 1/4	3	8 1/2	–	3'-9	TIGHT FIT	–	5 1/2		
2	x3dg	5	5	5 1/4	6'-2 7/8	9 1/4	3	8 3/8	–	–		–	5 1/2		
ONE	x3dh	8 9/16	2 3/4	4 7/8	6'-3 9/16	7 7/8	2 3/4	8 5/8	3'-6	–		–	5 9/16		
	x3dk	6 1/8						11 1/16		–		–			
	x3dm	8 9/16						8 5/8		3'-9		–			
	x3dn	6 1/8						11 1/16	3'-6			–			
	x3dp	8 9/16						8 5/8	–			–			
	x3ds	6 1/8			6'-3 9/16			11 1/16	–	3'-9		–	5 9/16		
	x3dt	8 7/16			6'-3 11/16			8 5/8	3'-6	–		–	5 7/16		
ONE	x3dw	6 1/8			6'-3 11/16			10 15/16		–		–	5 7/16		
2	x3dy	9 9/16			6'-2 9/16			8 5/8		–		–	5 3/8		
2	x3fa	6 1/8			6'-2 9/16			1'-0 1/16		–		–	5 3/8		
ONE	x3fb	8 3/8			6'-3 3/4			8 5/8		3'-9		–	5 5/16		
	x3fc	6 1/8			6'-3 3/4			10 7/8				–	5 5/16		
	x3fd	9 7/8			6'-2 1/4			8 5/8				–	5 1/4		
	x3ff	6 1/8			6'-2 1/4			1'-0 3/8				–			
	x3fg	9 1/2			6'-2 5/8			8 5/8				–			
	x3fh	6 1/8			6'-2 5/8			1'-0	3'-6			–			
	x3fk	8 1/4			6'-3 7/8			8 5/8	–			–			
ONE	x3fm	6 1/8			6'-3 7/8			10 3/4	–			–	5 1/4		
2	x3fn	9 11/16			6'-2 7/16			8 5/8	–			–	5 1/8		
2	x3fp	6 1/8			6'-2 7/16			1'-0 9/16	–			–			
ONE	x3fs	8 3/16			6'-3 15/16			8 5/8	–			–			
ONE	x3ft	6 1/8			6'-3 15/16			10 11/16	–			–	5 1/8		
2	x3fw	9 7/8			6'-2 1/4			8 5/8	–			–	5		
2	x3fy	6 1/8	2 3/4	4 7/8	6'-2 1/4	7 7/8	2 3/4	1'-0 3/8	–	3'-9	TIGHT FIT	–	5	3 1/2	7x 1/2 3/9
2	x3gg	5	5	5 1/4	6'-3	9 1/4	3	8 1/2	3'-6	3'-9	TIGHT FIT	–	5 9/16	3 1/2	7x 1/2 3/9
ONE	x3gh								3'-6	–					

NO.	REVISION	DATE
2	construction joint moved	11-19-84
1	CONTRACT REVISION CONTROL # 14	9-13-84

SHOP NOTE

HOLES: 15/16" ϕ (U.N.)

BOLTS: NONE

PAINT: NONE

FOR GENERAL NOTES SEE DWG. N1.

ALL STEEL TO BE A.S.T.M. A588.

R95-174

CODE: 4000

HIGH STEEL STRUCTURES, INC.
1905 Old Philadelphia Pike
Lancaster, Pennsylvania 17603
Phone 717/299-5211
A Subsidiary of High Industries, Inc.

JOB STANDARDS
I-395 BRIDGE OVER PENOBSCOT RIVER
I-395 BRIDGE STA. 164+60.00
PENOBSCOT COUNTY
STATE OF MAINE
DEPARTMENT OF TRANSPORTATION

STATE CONTRACT OR REF. NO. 6 CONTRACTOR GIANBRO CORP.

IN CHARGE: HINKLE MADE BY: G.F.Z. CHK.D. BY: JLC DATE: 9-24-84

CONTRACT NUMBER: ME-84-088-3 DRAWING NUMBER: X3

FED. ROAD DIV. NO.	STATE	FED. AID PROJ. NO.
1	ME	I-IG-395-8(82)176

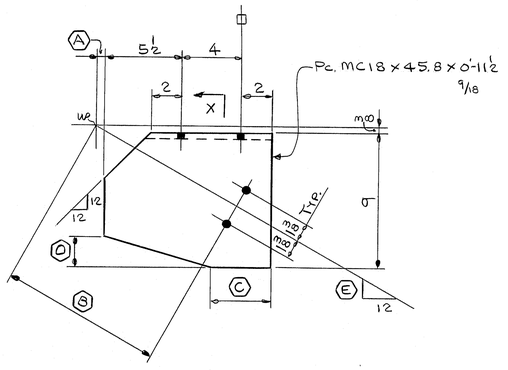

REQ'D.	MARK	A	B	C	D	E	AA
ONE	X4a	9/16	11	4	2	7⅞	2½
ONE	X4b	9/16	↑	↑	2	7⅞	↓
3	X4c	½	↓	↓	3½	6¾	↓
ONE	X4d	½	↓	4	3½	9	↓
6	X4m	9/16	↓	6	2	7⅞	↓
6	X4n	9/16	↓	–	–	7⅞	↓
12	X4t	½	↓	6	2	6¾	↓
6	X4w	½	11	–	–	6¾	2½
6	X4as	¼	10¼	–	–	7	2
27	X4at	↑	↑	–	–	6¾	↓
6	X4aw	↓	↓	–	–	7⅞	↓
8	X4ay	↓	↓	–	–	8⅜	↓
4	X4ba	↓	↓	–	–	7⅞	↓
4	X4bb	¼	10¼	–	–	8⅞	2
6	X4cs	½	11	–	–	9	2½
2	X4dd	¼	10¼	–	–	6¾	2⅞
ONE	X4df	¼	10¼	–	–	7⅞	2⅞

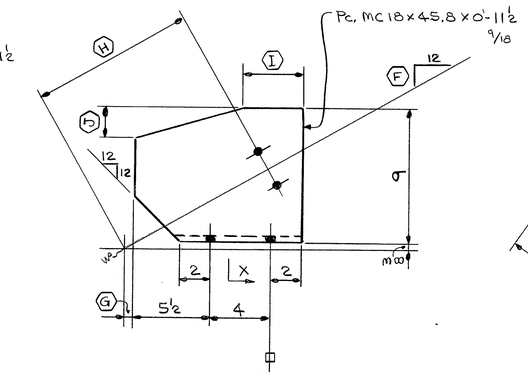

REQ'D.	MARK	F	G	H	I	J	AA
ONE	X4f	7⅞	9/16	11	4	2	2½
ONE	X4g	7⅞	9/16	↑	↑	2	↓
3	X4h	6¾	½	↓	↓	3½	↓
ONE	X4k	9	½	↓	4	3½	↓
6	X4p	7⅞	9/16	↓	6	2	↓
6	X4s	7⅞	9/16	↓	–	–	↓
12	X4y	6¾	½	↓	6	2	↓
6	X4aa	6¾	½	↓	–	–	↓
6	X4ab	9	½	11	–	–	2½
6	X4ag	7	¼	10¼	–	–	2
27	X4ah	6¾	↑	↑	–	–	↓
6	X4ak	7⅞	↓	↓	–	–	↓
8	X4am	8⅜	↓	↓	–	–	↓
4	X4an	7⅞	↓	↓	–	–	↓
4	X4ap	8⅞	¼	10¼	–	–	2
2	X4db	6¾	¼	10¼	–	–	2⅞
ONE	X4dc	7⅞	¼	10¼	–	–	2⅞

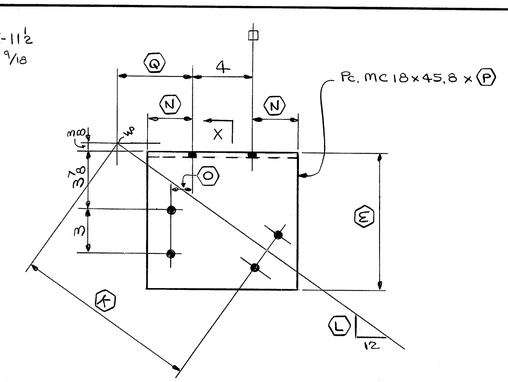

REQ'D.	MARK	K	L	m	N	O	P	Q	AA
ONE	X4ac	10¼	6¾	9	2¾	1¼	9½ 9/18	5	2½
ONE	X4ad	11½	9	9½	2¾	1¼	9½ 9/19	5	↓
ONE	X4af	10½	7	9	2¾	1¼	9½ 9/18	5	↓
20	X4bc	11	6¾	↑	3	1⅜	10 9/18	4⅞	↓
8	X4bd	↑	8⅜	↓	↑	↑	↑	↑	↓
2	X4bf	↓	7⅞	↓	↓	↓	↓	↓	↓
4	X4bg	↓	8⅞	↓	↓	↓	↓	↓	↓
6	X4bh	↓	9	↓	↓	↓	↓	↓	↓
7	X4bk	11	7	↓	3	1⅜	10	4⅞	↓
ONE	X4cy	10¼	7⅞	↓	2¾	1¼	9½	5	↓
6	X4ct	11	7⅞	9	3	1⅜	10 9/18	4⅞	2½

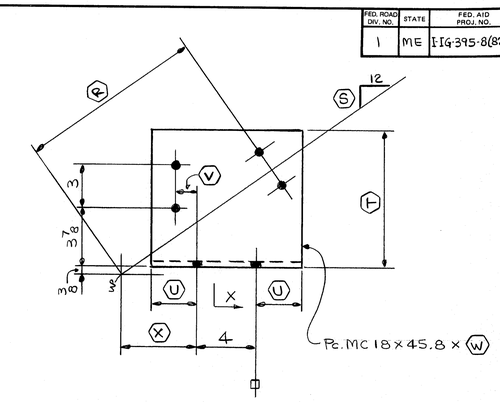

REQ'D.	MARK	R	S	T	U	V	W	X	AA
ONE	X4cm	10¼	6¾	9	2¾	1¼	9½ 9/18	5	2½
ONE	X4cn	11½	9	9½	2¾	1¼	9½ 9/19	5	↓
ONE	X4cp	10½	7	9	2¾	1¼	9½ 9/18	5	↓
20	X4bm	11	6¾	↑	3	1⅜	10 9/18	4⅞	↓
8	X4bn	↑	8⅜	↓	↑	↑	↑	↑	↓
3	X4bp	↓	7⅞	↓	↓	↓	↓	↓	↓
4	X4bs	↓	8⅞	↓	↓	↓	↓	↓	↓
6	X4bt	↓	9	↓	↓	↓	↓	↓	↓
5	X4bw	11	7	↓	3	1⅜	10	4⅞	↓
ONE	X4da	10¼	7⅞	↓	2¾	1¼	9½	5	↓
6	X4ow	11	7⅞	9	3	1⅜	10 9/18	4⅞	2½

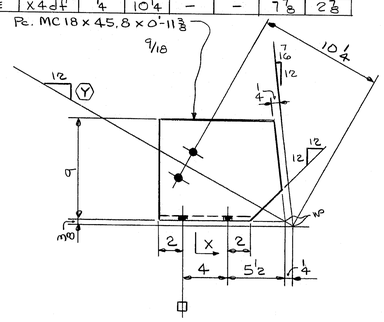

REQ'D.	MARK	Y	AA
ONE	X4by	6¼	2
↓	X4ca	6⅞	↓
↓	X4cb	7	↓
↓	X4cc	7⅛	↓
ONE	X4cd	7¼	2

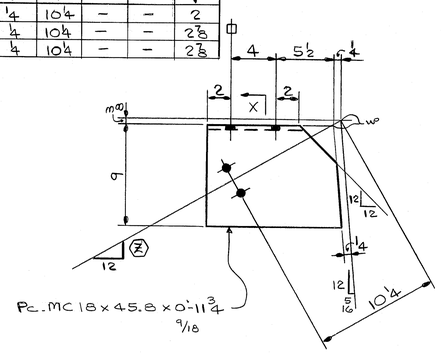

REQ'D.	MARK	Z	AA
2	X4cf	7⅛	2
ONE	X4cg	7¼	↓
ONE	X4ch	7⅜	↓
ONE	X4ck	7⅝	2

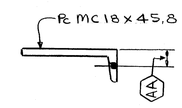

SECTION-X

SHOP NOTE

HOLES: 15/16"ϕ
BOLTS: NONE
PAINT: NONE

FOR GENERAL NOTES SEE DWG. N1.
ALL STEEL TO BE A.S.T.M. A588.

R95-175

CODE: 4000

NO.	REVISION	DATE
△	Revised span length Control #16	1-12-85

HIGH STEEL STRUCTURES, INC.
1905 Old Philadelphia Pike
Lancaster, Pennsylvania 17603
Phone 717/299-5211
A Subsidiary of High Industries, Inc.

JOB STANDARDS
I-395 BRIDGE OVER PENOBSCOT RIVER
I-395 BRIDGE STA. 164+60.00
PENOBSCOT COUNTY
STATE OF MAINE
DEPARTMENT OF TRANSPORTATION

STATE CONTRACT OR REF. NO. 6 CONTRACTOR GANDRO CORP
IN CHARGE: HINKLE MADE BY: G.F.Z. CHK.D. BY: JLC DATE: 9-24-84
CONTRACT NUMBER ME-84088-3 DRAWING NUMBER X4

FED. ROAD DIV. NO.	STATE	FED. AID PROJ. NO.
1	ME	IIG395-8(82)176

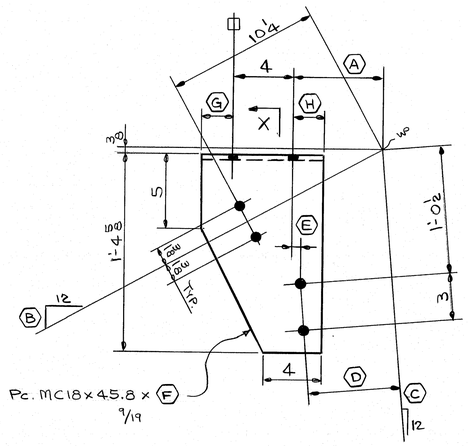

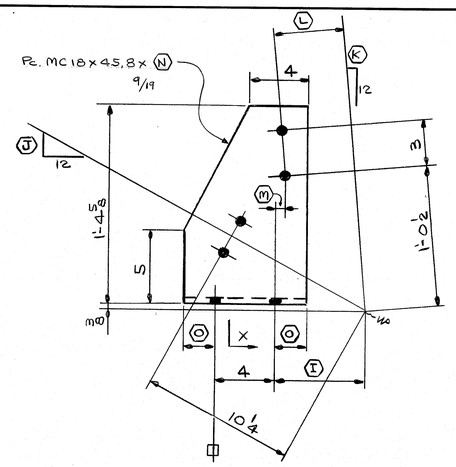

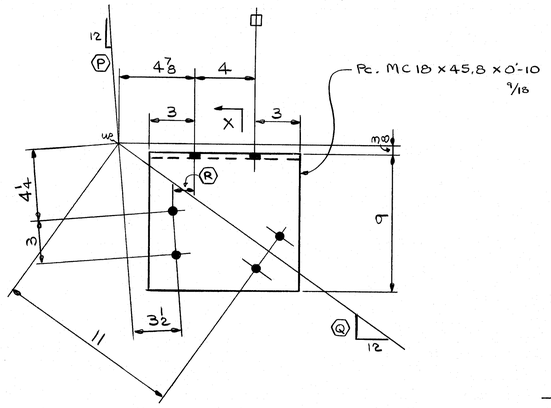

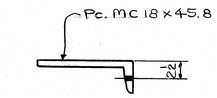

SECTION -X

REQ'D.	MARK	A	B	C	D	E	F	G	H
5	X5a	4⅞	7	0"	4⅛	¾	8½	2¼	2¼
ONE	X5c	6⅜	7¾	⅛	5⅞	⅝	8¼	2	2¼
ONE	X5d	6⅜	7⅞	5/16	5⅞	13/16	8⅜	2	2⅜
2	X5m	4¾	6¾	0"	3⅞	⅞	8¾	2⅜	2⅜
2	X5n	↕	7⅞	0"	↕	⅞	8¾	↕	2⅜
ONE	X5p		7	0"		⅞	8¾		2⅜
ONE	X5s	4¾	7⅜	7/16	3⅞	15/16	9⅜	2⅜	3

REQ'D.	MARK	I	J	K	L	M	N	O
3	X5b	4⅞	7	0"	4⅛	¾	8½	2¼
ONE	X5f	6⅜	7¾	0"	5⅞	½	8	2
↕	X5g	↕	7⅜	⅛	↕	⅜	↕	↕
	X5h		7⅜	5/16		3/16		
ONE	X5k	6⅜	7½	7/16	5⅞	1/16	8	2
2	X5t	4¾	6¾	0"	3⅞	⅞	8¾	2⅜
2	X5w	↕	7⅞	0"	↕	⅞	↕	↕
ONE	X5y		7	0"		⅞		
ONE	X5aa	4¾	7⅛	5/16	3⅞	9/16	8¾	2⅜

REQ'D.	MARK	P	Q	R
ONE	X5ab	5/16	7¼	1¼
↕	X5ac	↕	7⅜	↕
	X5ad		7½	
	X5af	5/16	7¾	1¼
ONE	X5ag	⅛	7⅞	1 5/16

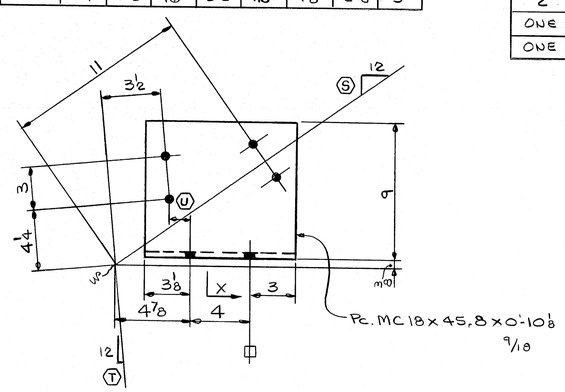

REQ'D.	MARK	S	T	U
ONE	X5ah	7½	7/16	1½
↕	X5ak	7⅝	↕	↕
	X5am	7⅞		
	X5an	8⅛	7/16	
	X5ap	8	5/16	1½
ONE	X5as	8	⅛	1 7/16

SHOP NOTE

HOLES: 15/16"ϕ

BOLTS: NONE

PAINT: NONE

FOR GENERAL NOTES SEE DWG. N1.

ALL STEEL TO BE A.S.T.M. A588

R95-176

CODE # 4000

NO.	REVISION	DATE

HIGH STEEL STRUCTURES, INC.
1905 Old Philadelphia Pike
Lancaster, Pennsylvania 17603
Phone 717/299-5211
A Subsidiary of High Industries, Inc.

JOB STANDARDS
I-395 BRIDGE OVER PENOBSCOT RIVER
I-395 BRIDGE STA. 164 +60.00
PENOBSCOT COUNTY
STATE OF MAINE
DEPARTMENT OF TRANSPORTATION

STATE CONTRACT OR REF. NO. 6 CONTRACTOR GANBRO CORP.

IN CHARGE: HINKLE MADE BY: G.F.Z. CHK.D. BY: JLC DATE: 9-24-84

CONTRACT NUMBER: ME-84088-3 DRAWING NUMBER: X5

FED.ROAD DIV.NO.	STATE	FED.AID PROJ.NO.
1	ME.	I-IG-395-8(82)176

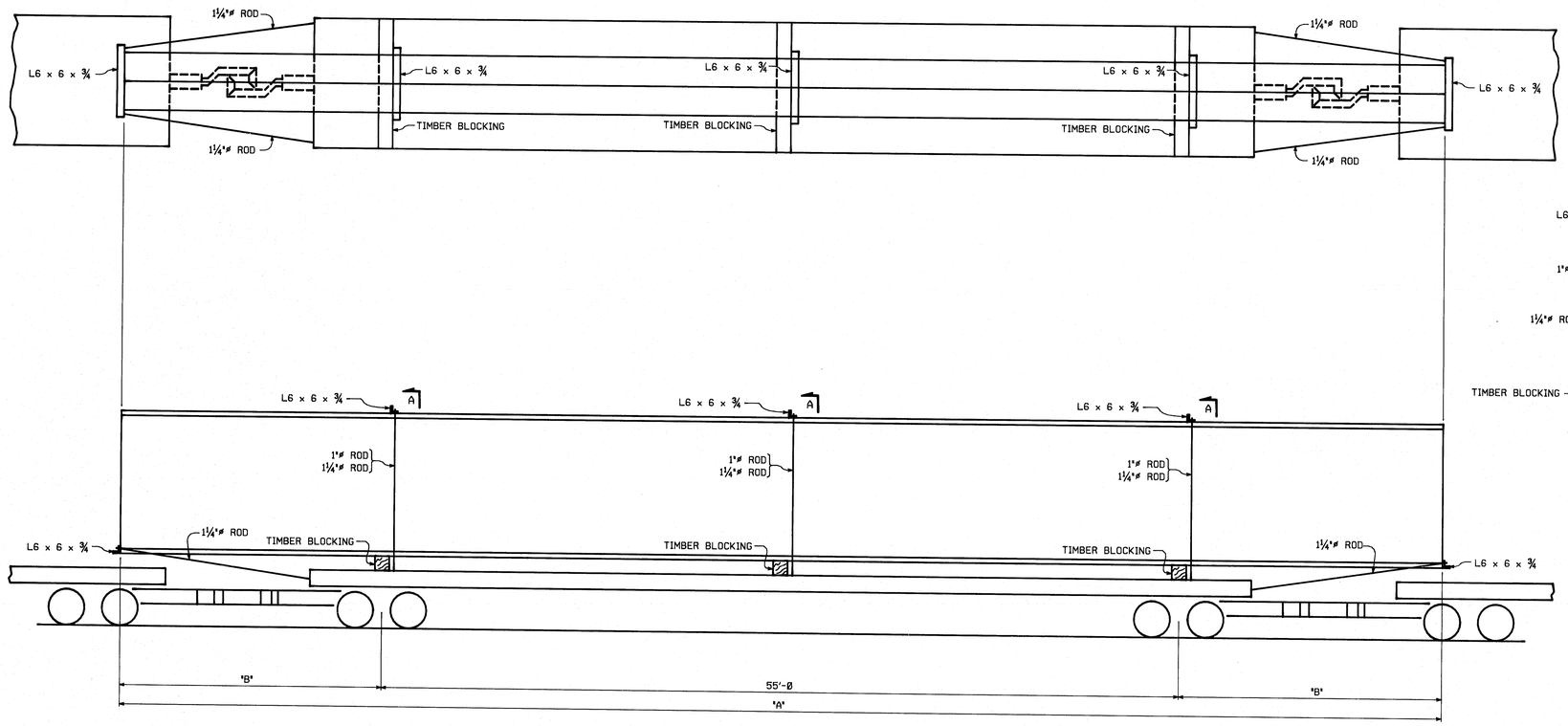

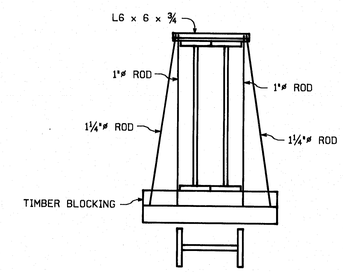

SECTION A

MARK	WEIGHT	'A'	'B'
G1L	74,975*	120'-0¼	32'-6⅛
G2L	75,965*	↑	↑
G3L	75,605*		
G4L	75,275*		
G5L	75,660*		
G6L	75,605*		
G7L	75,965*	↓	↓
G8L	74,975*	120'-0¼	32'-6⅛
G1M	41,870*	105'-0⅞	25'-0 7/16
G2M	42,660*	↑	↑
G3M	42,240*		
G4M	41,990*		
G5M	42,260*		
G6M	42,240*		
G7M	42,660*	↓	↓
G8M	41,870*	105'-0⅞	25'-0 7/16

MARK	WEIGHT	'A'	'B'
G1N	48,945*	90'-0½	17'-6¼
G2N	49,620*	↑	↑
G3N	49,525*		
G4N	49,225*		
G5N	49,225*		
G6N	49,525*		
G7N	49,620*	↓	↓
G8N	48,945*	90'-0½	17'-6¼
G1O	38,220*	105'-1¼	25'-0⅝
G2O	39,020*	↑	↑
G3O	38,595*		
G4O	38,225*		
G5O	38,370*		
G6O	38,595*		
G7O	39,020*	↓	↓
G8O	38,220*	105'-1¼	25'-0⅝

MARK	WEIGHT	'A'	'B'
G1P	52,900*	95'-0⅞	20'-0 7/16
G2P	53,695*	↑	↑
G3P	53,515*		
G4P	53,220*		
G5P	53,540*		
G6P	53,525*		
G7P	53,710*	↓	↓
G8P	52,900*	95'-0⅞	20'-0 7/16
G1Q	53,470*	126'-9	35'-10½
G2Q	54,470*	126'-9	35'-10½
G3Q	54,080*	126'-9	35'-10½
G4Q	53,825*	126'-9	35'-10½
G5Q	54,105*	126'-8⅞	35'-10 7/16
G6Q	54,085*	126'-9	35'-10½
G7Q	54,495*	126'-9⅜	35'-10 11/16
G8Q	53,510*	126'-10	35'-11

R95-177

NO.	REVISION	DATE

HIGH STEEL STRUCTURES, INC.
1905 Old Philadelphia Pike
Lancaster, Pennsylvania 17603
Phone 717/299-5211
A Subsidiary of High Industries, Inc.

SHIPPING PROCEDURE
1-395 BRIDGE OVER PENOBSCOT RIVER
1-395 BRIDGE STA. 164+60.00
PENOBSCOT COUNTY
STATE OF MAINE
DEPARTMENT OF TRANSPORTATION

STATE CONTRACT OR REF.NO. 6 CONTRACTOR CIANBRO CORP.
IN CHARGE: HINKLE MADE BY: RW CHK.D. BY: TC DATE: 4-8-85
CONTRACT NUMBER: ME-84088-3 DRAWING NUMBER: SP1

FED. ROAD DIV. NO.	STATE	FED. AID PROJ. NO.

GIRDERS "G"

	L	M	N	O	P	Q
1	9	15	21	27	32	40
2	10	16	22	28	33	41
3	11	17	23	29	34	42
4	12	18	24	30	35	43
5	13	19	25	31	36	44
6	11	17	23	29	37	45
7	14	20	26	28	38	46
8	9	15	21	27	39	47

CROSSFRAMES "CF"

	0	1	2	3	4	5	6	7	8	9
0	X	2	2	2	2	2	3	3	4	4
1	4	4	4	4	5	6	6			
2										
3										
4										
5										
6										
7										
8										
9	D1 thru D4 - Det'd on Dwg. #3									

CROSSFRAMES (KNOCKED DOWN)

	0	1	2	3	4	5	6	7	8	9
0	A1 thru A16 - Det'd on Dwg. #7									
1										
2	B1 thru B16 - Det'd on Dwg. #7									
3										
4	C1 thru C11 - Det'd on Dwg. #7									
5										
6	E1 thru E6 - Det'd on Dwg. #8									
7										
8										
9										

HORIZ. BRACING "HB"

	0	1	2	3	4	5	6	7	8	9
0	X	8	-						-	8
1	8	-							-	8
2	8	-							-	8
3	8	-							-	8
4	8	-							-	8
5	8	-							-	8
6										
7										
8										
9										

MISCELLANEOUS

	0	1	2	3	4	5	6	7	8	9
0	Scupper Support Angles									
1	MS1, MS2, MS3 - Det'd on Dwg. #7									
2										
3	Anchor Bolts, Washers &									
4	Fabric Pads - Det'd on Dwg. #1									
5										
6	Pot Bearings - Det'd on Dwg.									
7	#D-1001-1A thru 1F & D-1003-1A									
8										
9										

NO	REVISION	DATE

HIGH STEEL STRUCTURES, INC.

INDEX

I-395 BRIDGE OVER PENOBSCOT RIVER
I-395 BRIDGE STA. 164+60.00
PENOBSCOT COUNTY
STATE OF MAINE
DEPARTMENT OF TRANSPORTATION

STATE CONTRACT OR REF. NO. 6 CONTRACTOR CIANBRO CORP.

IN CHARGE HINKLE MADE BY CS CHKD BY DATE

CONTRACT NUMBER ME-84088-3 DRAWING NUMBER K1

R95-178

Print O Stat

AF 22693 A

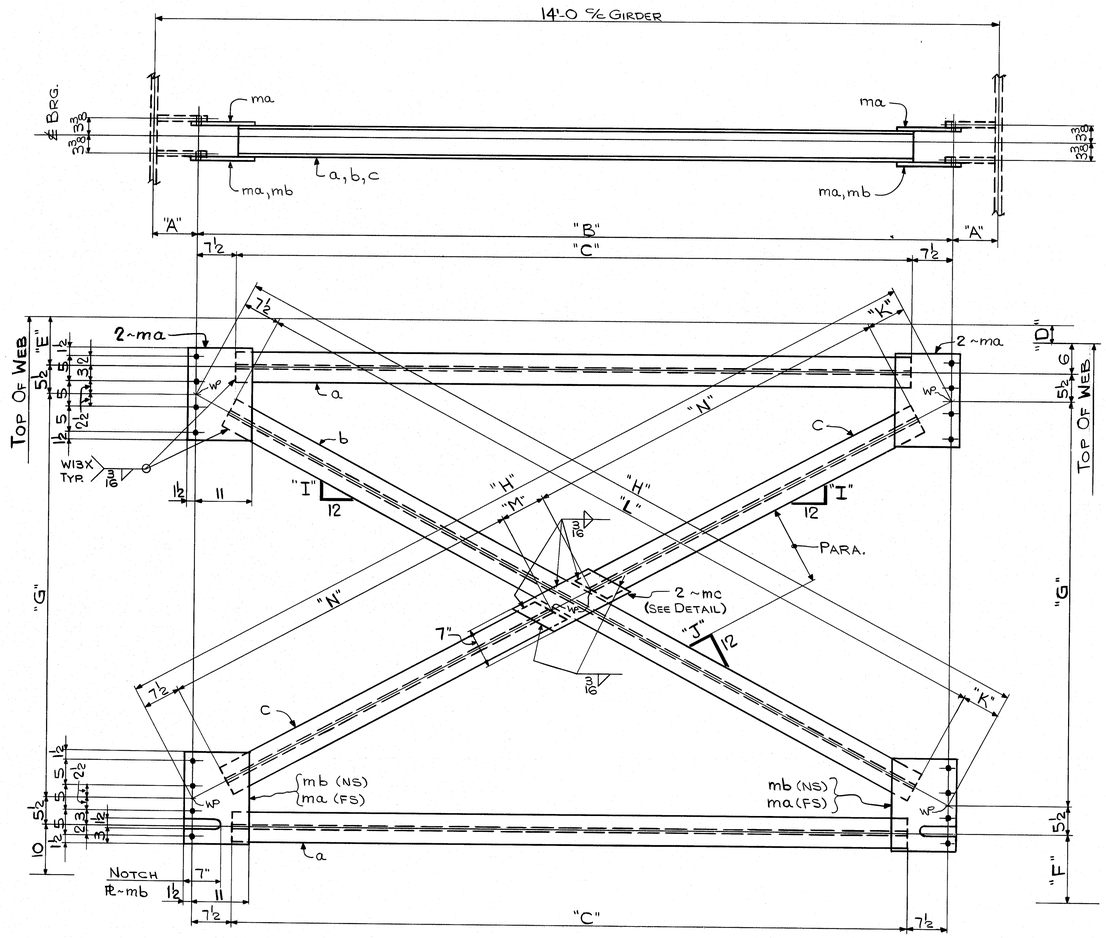

MK.	"A"	"B"	"C"	"D"	"E"	"F"	"G"	"H"	"I"	"J"	"K"	"L"	"M"	"N"
CF1	10⅞	12'-2¼	10'-11¼	2 5/16	8 5/16	1'-0 5/16	6'-9 11/16	13'-1½	6 11/16	7⅜	7½	12'-8½	8½	6'-0
CF2	10⅞	12'-2¼	10'-11¼	3½	9½	1'-1½	6'-8½	13'-10 15/16	6⅝	7⅜	7 7/16	12'-8	8½	5'-11¾
CF3	8⅞	12'-6¼	11'-3¼	2 5/16	8 5/16	1'-0 5/16	6'-9 11/16	14'-3	6½	7¾	7½	13'-0	8½	6'-1¾
CF4	8⅞	12'-6¼	11'-3¼	2 7/16	8 7/16	1'-0 7/16	6'-9 9/16	14'-2 15/16	6½	7 1/16	7 7/16	13'-0	8½	6'-1¾
CF5	8⅞	12'-6¼	11'-3¼	3½	9½	1'-1½	6'-8½	14'-2 7/16	6 7/16	8	7 7/16	12'-11½	8½	6'-1½

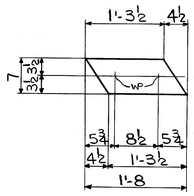

DETAIL OF BAR ~ mc

FED. ROAD DIV. NO.	STATE	FED. AID PROJ. NO.
1	ME.	I-IG-395-8(82)176

BILL OF MATERIAL

NO.	MARK	DESCRIPTION	LENGTH		REMARKS	ITEM	SHIP. WEIGHT EA.
2	CF1	CROSSFRAME					1234
4	CF2						1233
2	CF3						1258
2	CF4						1258
8	CF5						1256
12	a	WG x 20	10	11¼	CF1, CF2	6/20	
24	a		11	3¼	CF3, CF4, CF5	6/19	
2	b		12	8½	CF1	6/15	
4	b		12	8	CF2	6/16	
4	b		13	0	CF3, CF4	6/11	
8	b		12	11½	CF5	6/12	
4	c		6	1⅞	CF1	6/25	
8	c		6	1 11/16	CF2	6/26	
8	c		6	3 11/16	CF3, CF4	6/22	
16	c	WG x 20	6	3½	CF5	6/23	
108	ma	PL 12½ x ½	1	6		9/21	
36	mb	PL 12½ x ½	1	6		9/21	
36	mc	BAR 7 x ½	1	8	SEE DETAIL	9/21	

SHOP NOTE

HOLES: 15/16" ϕ

BOLTS: NONE

PAINT: NONE

FOR GENERAL NOTES SEE DWG. N1

R95-179

CODE: 5300

NO.	REVISION	DATE

HIGH STEEL STRUCTURES, INC.
1905 Old Philadelphia Pike
Lancaster, Pennsylvania 17603
Phone 717/299-5211
A Subsidiary of High Industries, Inc.

CROSSFRAME DETAILS (PIERS)
I-395 BRIDGE OVER PENOBSCOT RIVER
I-395 BRIDGE STA. 164+60.00
PENOBSCOT COUNTY
STATE OF MAINE
DEPARTMENT OF TRANSPORTATION

STATE CONTRACT OR REF. NO. 6 CONTRACTOR CIANBRO CORP.

IN CHARGE: HINKLE MADE BY: JLC CHK.D. BY: BJK DATE: 7-27-84

CONTRACT NUMBER: ME-84088-3 DRAWING NUMBER: 2 OF 4-7

POLYTRACE 036

AF 22683A

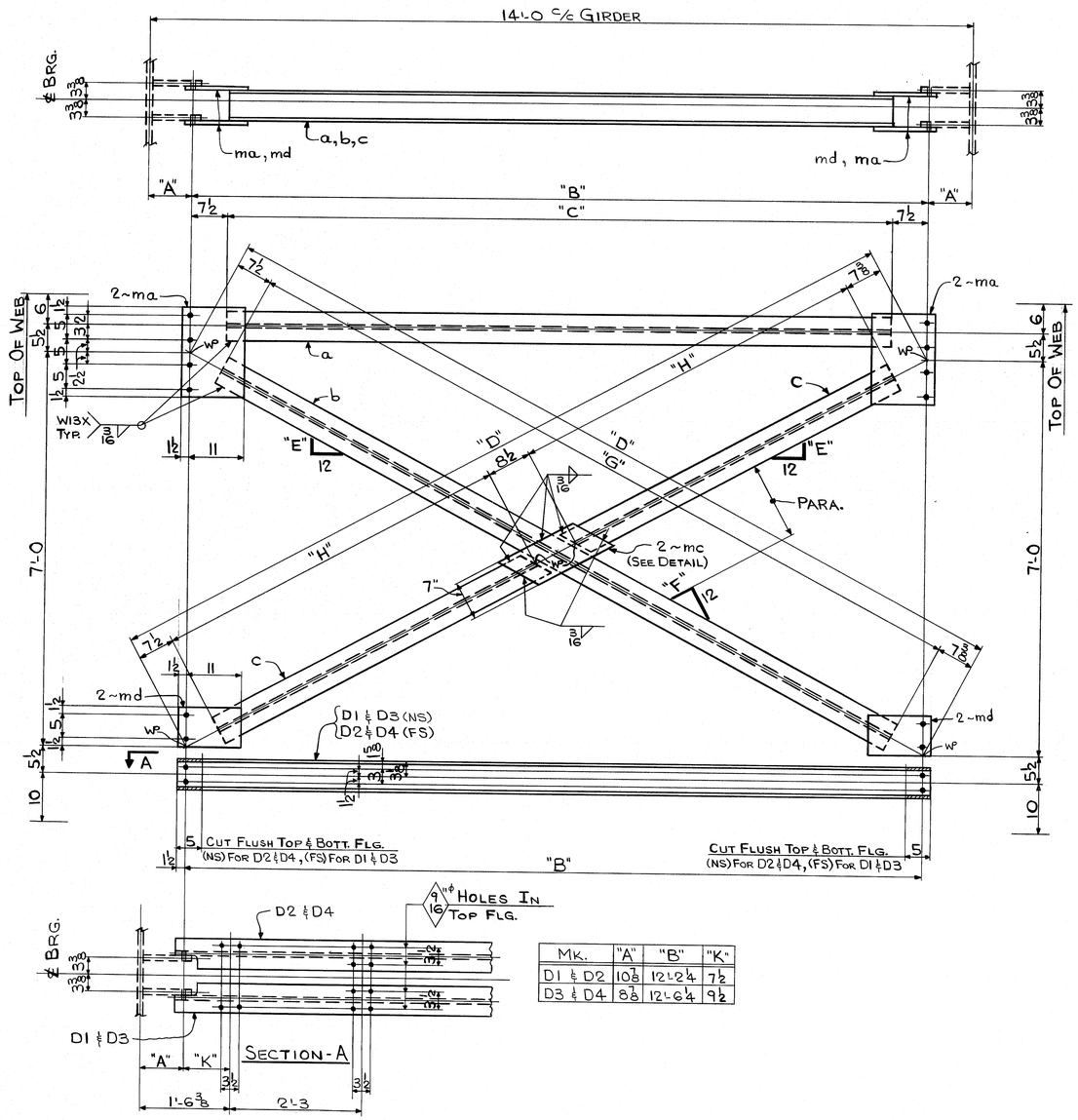

MK.	"A"	"B"	"K"
D1 & D2	10⅞	12'-2¼	7½
D3 & D4	8⅞	12'-6¼	9½

MK.	"A"	"B"	"C"	"D"	"E"	"F"	"G"	"H"
CF6	10⅞	12'-2¼	10'-11¼	14'-0⅝	6⅞	7	12'-9¾	6'-0⅝
CF7	8⅞	12'-6¼	11'-3¼	14'-4⅛	6 11/16	7⅜	13'-1¼	6'-2⅜

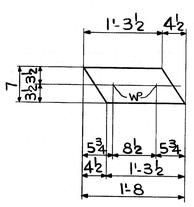

DETAIL OF BAR ~ mc

FED. ROAD DIV. NO.	STATE	FED. AID PROJ. NO.
1	ME	I-IG-395-8(82)176

BILL OF MATERIAL

NO.	MARK	DESCRIPTION	LENGTH		REMARKS	ITEM	SHIP. WEIGHT EA.
1	CF6	CROSSFRAME					917
2	CF7	CROSSFRAME					965
1	a	WG x 20	10	11¼	CF6	6/20	
2	a		11	3¾	CF7	6/19	
1	b		12	9¾	CF6	6/13	
2	b		13	1¼	CF7	6/10	
2	c		6	2⅜	CF6	6/24	
4	c	WG x 20	6	4¼	CF7	6/21	
12	ma	PL 12½ x ½	1	6		9/21	
6	mc	BAR 7 x ½	1	8	SEE DETAIL	9/21	
12	md	BAR 8 x ½	1	0½		9/21	
1	D1	WG x 20	12	5¼		6/17	249
1	D2		12	5¼		6/17	249
2	D3		12	9¼		6/14	255
2	D4	WG x 20	12	9¼		6/14	255

SHOP NOTE

HOLES: 15/16"ϕ (U.N.)
BOLTS: NONE
PAINT: NONE

FOR GENERAL NOTES SEE DWG. N1

R95-180

CODE: 5300

NO.	REVISION	DATE

HIGH STEEL STRUCTURES, INC.
1905 Old Philadelphia Pike
Lancaster, Pennsylvania 17603
Phone 717/299-5211
A Subsidiary of High Industries Inc

CROSSFRAME DETAILS (PIERS)
I-395 BRIDGE OVER PENOBSCOT RIVER
I-395 BRIDGE STA. 164+60.00
PENOBSCOT COUNTY
STATE OF MAINE
DEPARTMENT OF TRANSPORTATION

STATE CONTRACT OR REF. NO. 6 CONTRACTOR CIANBRO CORP.
IN CHARGE: HINKLE MADE BY: JLC CHK.D. BY: BJK DATE: 7-27-84
CONTRACT NUMBER: ME-84088-3 DRAWING NUMBER: 3 OF 47

FED. ROAD DIV. NO.	STATE	FED. AID PROJ. NO.
1	ME	I-IG-395-8(82)116

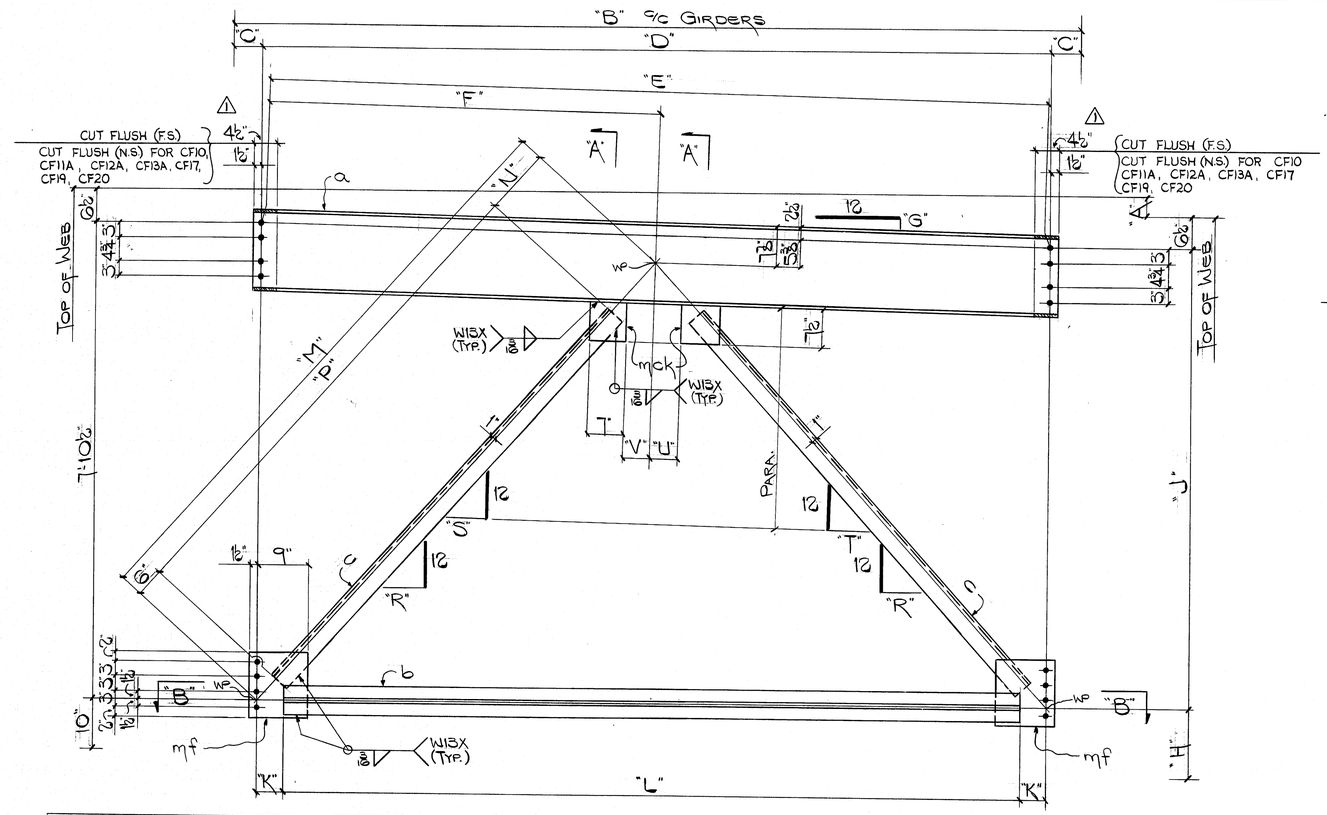

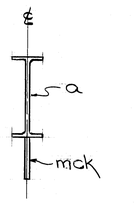

SECTION "A"

BILL OF MATERIAL

NO.	MARK	DESCRIPTION	LENGTH		REMARKS	ITEM	SHIP. WEIGHT EACH
One	CF8	CROSSFRAME					673.
One	CF9						669.
2	CF10						669.
2	CF11						682.
2	CF11A						682.
2	CF12						680.
2	CF12A						680.
3	CF13						680.
2	CF13A	CROSSFRAME					680.
1	a	W16×26	12	11½	CF8	9/4	
1	a	W16×26	12	11¾	CF9	5/23	
2	a	W16×26	13	0	CF10	5/24	
4	a	W16×26	13	3¾	CF11, CF11A	5/21	
10	a	W16×26	13	4	CF12, CF12A CF13, CF13A	5/22	
18	b	WT5×11	12	2		9/3	
2	c	L4×4×⅜	8	3¼	CF8	9/11	
2	c	L4×4×⅜	8	1¼	CF9	9/14	
4	c	L4×4×⅜	8	0⅜	CF10	9/15	
8	c	L4×4×⅜	8	2⅝	CF11, CF11A	9/12	
20	c	L4×4×⅜	8	1¾	CF12, CF12A CF13, CF13A	9/13	
36	mf	PL 10½×⅜	1	1		9/22	
36	mck	BAR 7×⅜	0	7½		9/22	
One	CF17	CROSSFRAME					680
One	CF18						684.
One	CF19						682.
One	CF20	CROSSFRAME					682.
1	a	W16×26	13	3¾	CF17	5/21	
1	a	W16×26	13	4½	CF18	5/5	
2	a	W16×26	13	4⅜	CF19, CF20	5/25	
1	b	WT5×11	12	2	CF17	9/3	
3	b	WT5×11	12	2¾	CF18, CF19, CF20	9/8	
2	c	L4×4×⅜	8	2½	CF17	9/30	
2	c	L4×4×⅜	8	2¾	CF18	9/29	
4	c	L4×4×⅜	8	2	CF19, CF20	9/31	
8	mf	PL					
8	mck	BAR					

	MARK	"A"	"B"	"C"	"D"	"E"	"F"	"G"	"H"	"J"	"K"	"L"	"M"	"N"	"P"	"R"	"S"	"T"	"U"	"V"
	CF8	0"	14'-0"	7¾"	12'-8½"	12'-8½"	6'-4¼"	0	10"	7'-10½"	3¼"	12'-2"	9'-9⅜"	1'-0½"	8'-3¼"	10¼	10¼	10¼	5¼"	5¼"
	CF9	2½"		7¾"	12'-8½"	12'-8½"	6'-4⅝"	⅜	1'-0½"	7'-8"	3¼"		9'-8⅜"	1'-1⅝"	8'-1¼"	10½	10 1/16	10¾	6"	5½"
OPP. HAND	CF10	3½"		7¾"	12'-8½"	12'-8 9/16"	6'-4⅜"	4	1'-1½"	7'-7"	3¼"		9'-7 15/16"	1'-1 9/16"	8'-0⅜"	10½	10	10 15/16	6"	5½"
	CF11 CF11A	2 7/16"		5¾"	13'-0½"	13'-0½"	6'-6 5/16"	⅜	1'-0 5/16"	7'-8 3/16"	5¼"		9'-9¾"	1'-1⅝"	8'-2⅜"	10 11/16	10⅜	11	6"	5½"
OPP. HAND	CF12 CF13 CF12A CF13A	3½"		5¾"	13'-0½"	13'-0 9/16"	6'-6⅜"	4	1'-1½"	7'-7"	5¼"		9'-9 5/16"	1'-1 9/16"	8'-1¾"	10¾	10¼	11¼	6¾"	5½"
OPP. HAND	CF17	2 7/16"	14'-0"	5¾"	13'-0½"	13'-0½"	6'-6 5/16"	⅜	1'-0 7/16"	7'-8 1/16"	5¼"	12'-2"	9'-9 11/16"	1'-1 3/16"	8'-2½"	10 11/16	10⅜	11	6"	5½"
	CF18	2 7/16"	14'-0¾"	5¾"	13'-1¼"	13'-1¼"	6'-6 11/16"	⅜	1'-0 7/16"	7'-8 1/16"	5¼"	12'-2¾"	9'-9 15/16"	1'-1 3/16"	8'-2¾"	10¾	10 7/16	11 1/16	6"	5½"
OPP. HAND	CF19	3⅜"	14'-0¾"	5¾"	13'-1¼"	13'-1 5/16"	6'-6¾"	4	1'-1⅜"	7'-7⅛"	5¼"	12'-2¾"	9'-9⅞"	1'-1 7/16"	8'-2"	10 13/16	10 5/16	11¼	6¾"	5½"
OPP. HAND	CF20																			

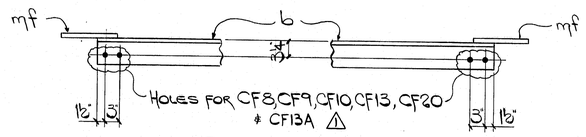

SECTION "B-B"

SHOP NOTE

HOLES: 15/16"ϕ

BOLTS: NONE

PAINT: NONE

FOR GENERAL NOTES - SEE DWG. N1

R95-181

CODE: 5300

NO.	REVISION	DATE
△	REV. FRAMES TO OPP. HAND	6-12-85

HIGH STEEL STRUCTURES, INC.
1905 Old Philadelphia Pike
Lancaster, Pennsylvania 17603
Phone 717/299-5211
A Subsidiary of High Industries, Inc

CROSSFRAME DETAILS (D1 MOD.)
I-395 BRIDGE OVER PENJOBSCOT RIVER
I-395 BRIDGE STA. 164+60.00
PENJOBSCOT COUNTY
STATE OF MAINE
DEPARTMENT OF TRANSPORTATION

STATE CONTRACT OR REF. NO. 6 CONTRACTOR GIANBRO CORP.

IN CHARGE: HINKLE MADE BY: CS CHK.D. BY: BJK DATE: 11-27-84

CONTRACT NUMBER: ME-84088-3 DRAWING NUMBER: 4 OF 47

FED. ROAD DIV. NO.	STATE	FED. AID PROJ. NO.
1	ME.	I-IG-395-8(82)176

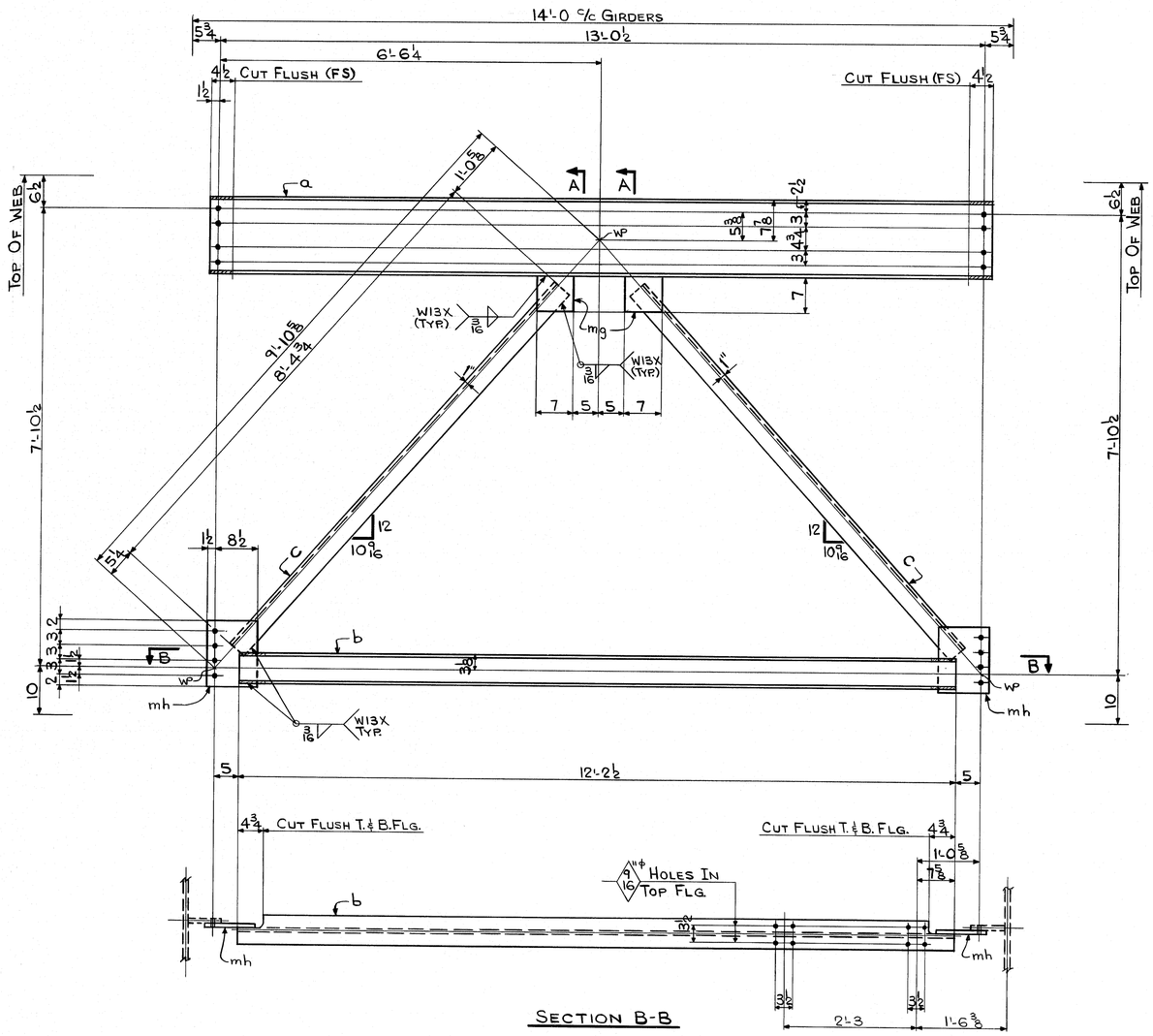

SECTION B-B

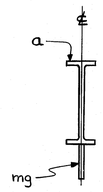

SECTION-A

BILL OF MATERIAL

NO.	MARK	DESCRIPTION	LENGTH		REMARKS	ITEM	SHIP WEIGHT EA.
3	CF14	CROSSFRAME					792
3	a	W16 x 26	13	3½		6/3	
3	b	W6 x 20	12	2½		9/18	
6	c	L 4 x 4 x ⅜	8	4¾		9/10	
6	mg	BAR 7 x ⅜	0	7		9/22	
6	mh	PL 10 x ⅜	1	1		9/22	

SHOP NOTE

HOLES: 15/16" ϕ (U.N.)

BOLTS: NONE

PAINT: NONE

FOR GENERAL NOTES SEE DWG. N1

R95-182

CODE: 5300

NO.	REVISION	DATE

HIGH STEEL STRUCTURES, INC.
1905 Old Philadelphia Pike
Lancaster, Pennsylvania 17603
Phone 717/299-5211
A Subsidiary of High Industries, Inc.

CROSSFRAME DETAILS (D2 MOD.)
I-395 BRIDGE OVER PENOBSCOT RIVER
I-395 BRIDGE STA. 164+60.00
PENOBSCOT COUNTY
STATE OF MAINE
DEPARTMENT OF TRANSPORTATION

STATE CONTRACT OR REF. NO. 6 CONTRACTOR CIANBRO CORP.

IN CHARGE: HINKLE MADE BY: JLC CHK.D. BY: BJK DATE: 7-30-84

CONTRACT NUMBER: ME-84088-3 DRAWING NUMBER: 5 OF 47

FED. ROAD DIV. NO.	STATE	FED. AID PROJ. NO.
1	ME	I-IG-3958(82)116

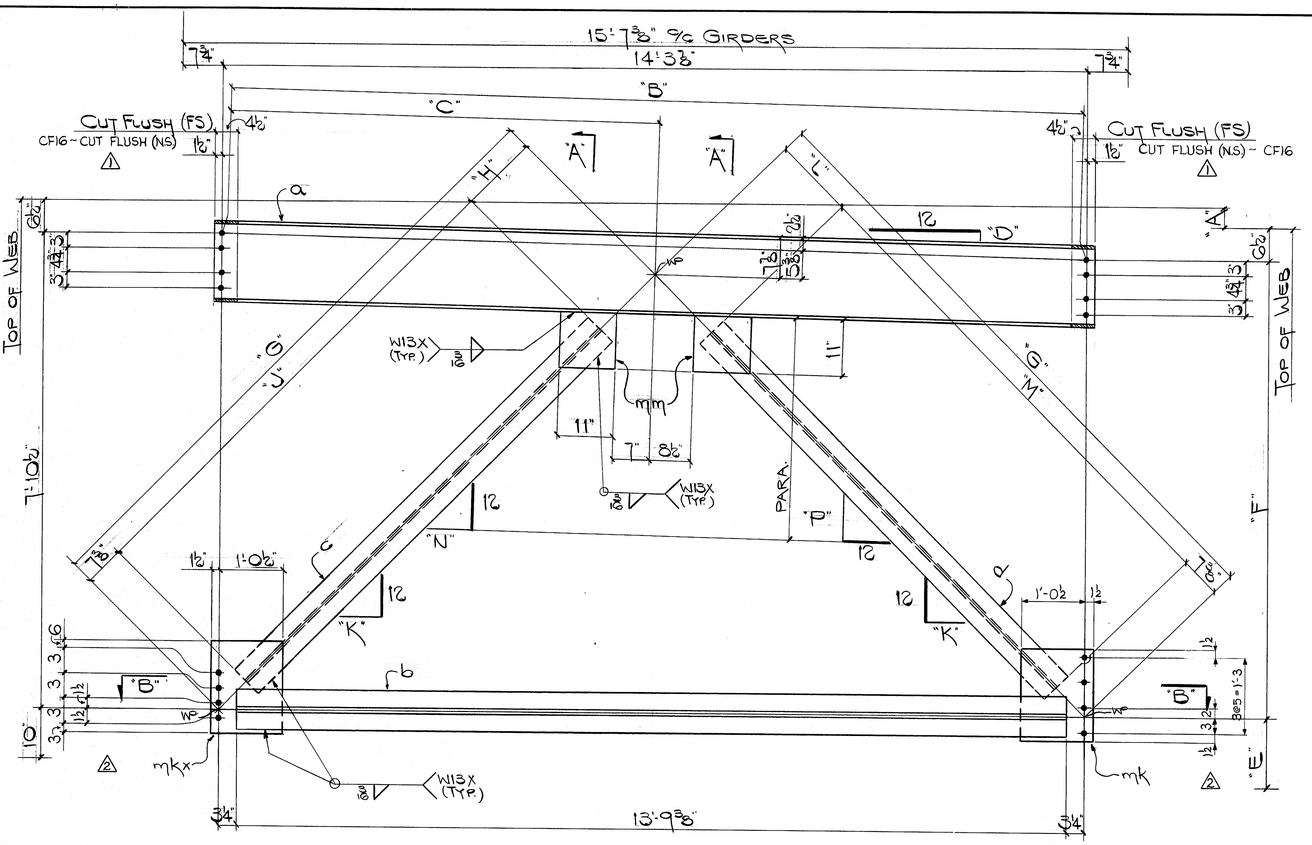

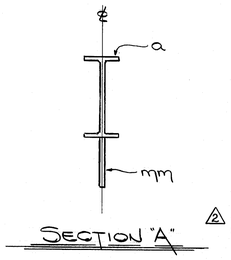

SECTION "A"

BILL OF MATERIAL

NO.	MARK	DESCRIPTION	LENGTH		REMARKS	ITEM	SHIP. WEIGHT EA.
2	CF15	CROSSFRAME					970.
ONE	CF16	CROSSFRAME					975.
2	a	W16×26	14	7⅜	CF15	9/40	
1	a	W16×26	14	7⅜	CF16	9/40	
3	b	WT7×21.5	15	9⅜		9/7	
2	c	WT6×13	8	3½	CF15	9/29	
1	c	WT6×13	8	4	CF16	9/30	
2	d	WT6×13	8	3	CF15	9/29	
1	d	WT6×13	8	4	CF16	9/30	
3	mkx	PL 14 × ⅜	1	6		9/22	
3	mk	PL 14 × ⅜	1	6		9/22	
6	mm	PL 11 × ⅜	0	11		9/22	

	MARK	"A"	"B"	"C"	"D"	"E"	"F"	"G"	"H"	"J"	"K"	"L"	"M"	"N"	"P"
	CF15	4"	14'-3 15/16"	7'-2 1/16"	4	1'-2"	7'-6½"	10'-2 3/8"	1'-3½"	8'-3½"	11 13/16"	1'-4"	8'-3"	11¼	11 5/8
△1 OPP. HAND	CF16	2"	14'-3 3/8"	7'-2"	8	1'-0"	7'-8½"	10'-3 1/16"	1'-3 11/16"	8'-4"	11 11/16"	1'-3 11/16"	8'-4"	11 7/16	12

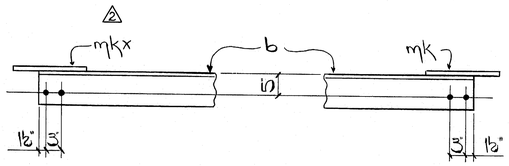

SECTION "B-B"

SHOP NOTE

HOLES: 15/16"ϕ

BOLTS: NONE

PAINT: NONE

FOR GENERAL NOTES - SEE DWG N1

R95-183

CODE: 5300

NO.	REVISION	DATE
△2	REV. BOTT. LEFT GUSSET R. TO MATCH GDR.	6-25-85
△1	REV. CFG TO OPP. HAND	6-12-85

HIGH STEEL STRUCTURES, INC.
1905 Old Philadelphia Pike
Lancaster, Pennsylvania 17603
Phone 717/299-5211
A Subsidiary of High Industries, Inc

CROSSFRAME DETAILS (DS MOD.)
I-395 BRIDGE OVER PENOBSCOT RIVER
I-395 BRIDGE STA. 164+60.00
PENOBSCOT COUNTY
STATE OF MAINE
DEPARTMENT OF TRANSPORTATION

STATE CONTRACT OR REF. NO. 6 CONTRACTOR CIANBRO CORP.

IN CHARGE: HINKLE MADE BY: CS CHK.D. BY: BJK DATE: 11-27-84

CONTRACT NUMBER: ME-84088-3 DRAWING NUMBER: 6 OF 47

AF 22693A

FED. ROAD DIV. NO.	STATE	FED. AID PROJ. NO.
1	ME	I-IG 395-8(82)176

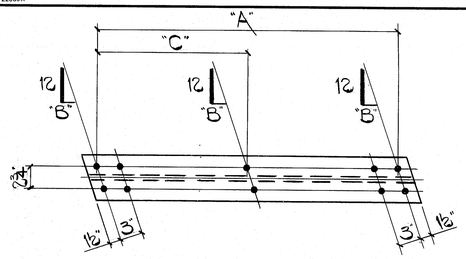

MARK	"A"	"B"	"C"
A1	14'-11¼"	5 9/16"	7'-5 3/8"
A2	14'-11 5/16"	5 9/16"	7'-5 9/16"
A3	14'-10 13/16"	5½	7'-5 3/8"
A4	14'-10¾"	5½	7'-5 3/8"
A5	15'-3 3/8"	5 7/16	7'-7 11/16"
A6	15'-2⅛"	5⅜	7'-7 1/16"
A7	15'-6¾"	5 5/16	7'-9⅜"
A8	15'-6 5/16"	5¼	7'-9 3/16"

MARK	"A"	"B"	"C"
A9	15'-6⅛"	5¼	7'-9 1/16"
A10	15'-10¾"	5¼	7'-11⅛"
A11	15'-9⅝"	5⅛	7'-10 5/16"
A12	16'-1 11/16"	5⅛	8'-0 13/16"
A13	16'-1 1/16"	5	8'-0 9/16"
A14	14'-11"	5⅜	7'-5½"
A15	14'-10 15/16"	5⅛	7'-5½"
A16	14'-10⅜"	5½	7'-5 7/16"

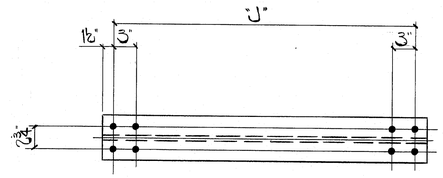

MARK	"J"
C1	13'-6⅛"
C2	13'-11"

MARK	"J"
C3	14'-2 11/16"
C4	14'-6 7/16"

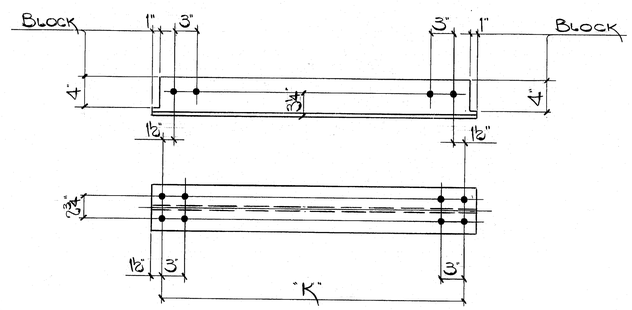

MARK	"K"
C5	13'-6½"
C6	13'-11"
C7	14'-2 11/16"

MARK	"K"
C8	14'-6 11/16"
C9	14'-10 5/16"

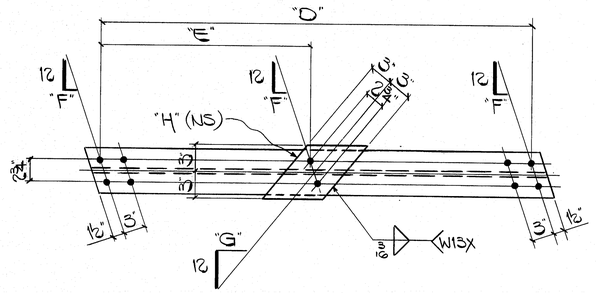

MARK	"D"	"E"	"F"	"G"	"H"
B1	14'-11¼"	7'-5 3/8"	5 9/16"	10 1/16"	mp
B2	14'-11⅛"	7'-5 3/8"	5 9/16"	10⅛"	ms
B3	14'-10 13/16"	7'-5 1/16"	5½	10 9/16"	mt
B4	14'-10¾"	7'-5 3/8"	5½	10 9/16"	mt
B5	15'-3⅜"	7'-7 11/16"	5 7/16	10½	mw
B6	15'-2⅜"	7'-7 1/16"	5⅜	10¾	my
B7	15'-6¾"	7'-9⅜"	5 5/16	10⅜	maa
B8	15'-6 5/16"	7'-9⅛"	5¼	11⅛	mab

MARK	"D"	"E"	"F"	"G"	"H"
B9	15'-6⅛"	7'-9 1/16"	5¼	11 3/16"	mac
B10	15'-10¾"	7'-11⅛"	5¼	11 3/16"	mac
B11	15'-9⅝"	7'-10 13/16"	5⅛	11⅛	mad
B12	16'-1 11/16"	8'-0⅜"	5⅛	11⅛	mad
B13	16'-1 1/16"	8'-0½"	5	11⅛	maf
B14	14'-11"	7'-5½"	5 9/16	10¾	mag
B15	14'-10 15/16"	7'-5 7/16"	5½	10¾	mah
B16	14'-10⅜"	7'-5 7/16"	5½	10 3/16"	mt

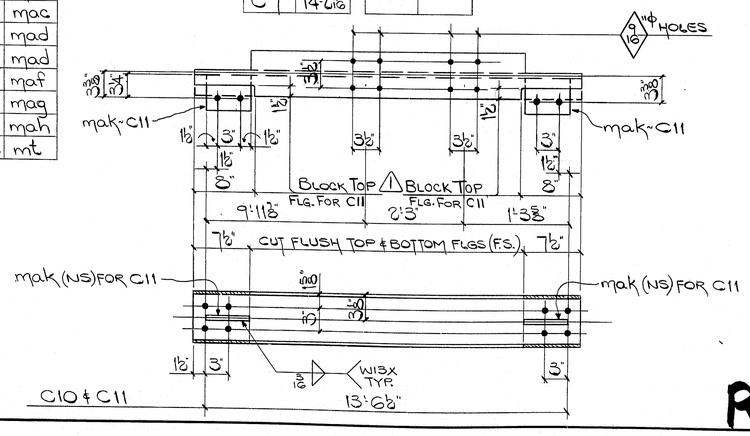

MS1	2'-2¾"
MS2	1'-6¾"
MS3	4'-8½"

SHOP NOTE

HOLES: 15/16" Φ (UNLESS NOTED)
BOLTS: NONE
PAINT: NONE

FOR GENERAL SHOP NOTES SEE DWG N1

R95-184 CODE: 5300

BILL OF MATERIAL

NO.	MARK	DESCRIPTION	LENGTH		REMARKS	ITEM	SHIP WEIGHT EA.
22	C1	WT5×11	13	9½		8/65	152
2	C2	↑	14	2		8/63	156
2	C3	↓	14	5¾		8/62	159
2	C4	WT5×11	14	9½		8/21	163
52	C5	WT5×11	13	9½		8/25	152
ONE	C6	↑	14	2		8/23	156
ONE	C7	↓	14	5¾		8/22	159
ONE	C8	↓	14	9½		8/21	163
3	C9	WT5×11	15	1¼		8/20	166
17	C10	W6×20	13	9½		6/9	275
4	C11	W6×20	13	9½		6/9	284
8	mak	BAR 4¾×½	0	6		9/21	
22	MS1	L3×3×⅜	2	2¾		9/21	16
ONE	MS2	L3×3×⅜	1	6¾		9/21	11
24	MS3	L3×3×⅜	4	8½		9/21	34

BILL OF MATERIAL

NO.	MARK	DESCRIPTION	LENGTH		REMARKS	ITEM	SHIP WEIGHT EA.
29	A1	WT5×11	15	5¼		8/16	170
9	A2	↑	15	5 5/16		8/16	170
2	A3		15	4¾		8/19	170
74	A4		15	4 1/16		8/19	170
ONE	A5		15	9¼		8/12	173
2	A6		15	8¾		8/13	173
ONE	A7		16	0 5/16		8/9	177
ONE	A8		16	0 1/16		8/10	176
ONE	A9		15	11 15/16		8/11	176
ONE	A10		16	4		8/7	180
2	A11		16	3⅜		8/8	179
ONE	A12		16	7⅜		8/5	183
2	A13		16	6 1/16		8/6	182
17	A14		15	4 5/16		8/17	170
2	A15		15	4⅜		8/18	170
2	A16	WT5×11	15	4 5/16		8/18	170
29	B1	WT5×11	15	5¼		8/16	181
9	B2	↑	15	5 5/16		8/16	181
2	B3		15	4¾		8/19	180
74	B4		15	4 1/16		8/19	180
ONE	B5		15	9¼		8/12	184
2	B6		15	8¾		8/13	184
ONE	B7		16	0 5/16		8/9	188
ONE	B8		16	0 1/16		8/10	187
ONE	B9		15	11 15/16		8/11	187
ONE	B10		16	4		8/7	191
2	B11		16	3⅜		8/8	190
ONE	B12		16	7⅜		8/5	194
2	B13		16	6 1/16		8/6	193
17	B14		15	4 5/16		8/17	181
2	B15		15	4⅜		8/18	180
2	B16	WT5×11	15	4 5/16		8/18	180
29	mp	BAR 6×½	1	0⅜	B1	9/21	
9	ms	↑	1	1	B2	↑	
78	mt		1	1⅛	B3,B4,B16		
1	mw		1	1¼	B5		
2	my		1	1½	B6		
1	maa		1	1⅝	B7		
1	mab		1	1¾	B8		
2	mac		1	1¾	B9,B10		
3	mad		1	2⅛	B11,B12		
2	maf		1	2⅜	B13		
17	mag	↓	1	1	B14	↓	
2	mah	BAR 6×½	1	1	B15	9/21	
	mt						

NO.	REVISION	DATE
1	REMOVE TOP FLG. BLOCK FOR C10	2-27-84

HIGH STEEL STRUCTURES, INC.
1905 Old Philadelphia Pike
Lancaster, Pennsylvania 17603
Phone 717/299-5211
A Subsidiary of High Industries, Inc.

CROSSFRAMES
I-395 BRIDGE OVER PENOBSCOT RIVER
I-395 BRIDGE STA. 164+60.00
PENOBSCOT COUNTY
STATE OF MAINE
DEPARTMENT OF TRANSPORTATION

STATE CONTRACT OR REF. NO. 6 CONTRACTOR CIANBRO CORP.
IN CHARGE: HINKLE MADE BY: C.S. CHK.D. BY: JLC DATE: 9-26-84
CONTRACT NUMBER: ME-84088-3 DRAWING NUMBER: 7 OF 47

© POLYTRACE 328

AF 22683A

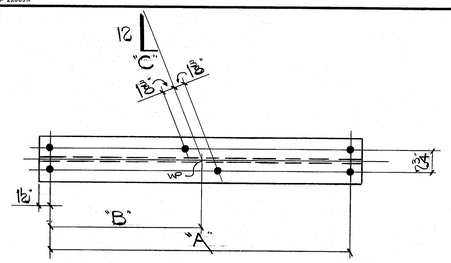

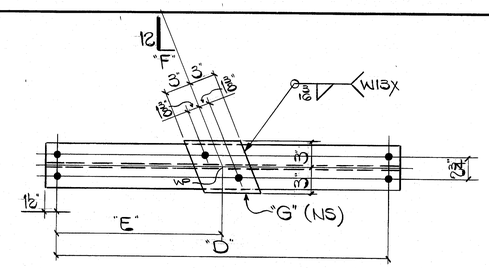

MARK	"A"	"B"	"C"
HB1	26'-0⅝"	12'-11 11/16"	6 15/16"
HB3	26'-10⅛"	13'-4⅜"	7⅜"
HB5	25'-6"	12'-9"	6½"
HB7	23'-7⅜"	11'-9 9/16"	5⅝"
HB9	22'-7⅜"	11'-3 1/16"	4⅜"
HB11	26'-11¾"	13'-5⅜"	7⅜"
HB13	26'-6⅜"	13'-3 5/16"	7⅛"
HB15	26'-7⅜"	13'-3 9/16"	7⅛"
HB19	23'-10⅜"	11'-10 5/16"	5⅞"
HB21	21'-10"	10'-10⅜"	3¾"
HB23	21'-6⅜"	10'-9 9/16"	3 9/16"
HB27	26'-7⅜"	13'-4 1/16"	7⅛"
HB58	21'-5⅜"	10'-8 11/16"	3 9/16"
HB59	25'-9⅜"	12'-10 11/16"	6⅜"

MARK	"A"	"B"	"C"
HB25	26'-8⅜"	13'-3 11/16"	7 5/16"
HB27	26'-1"	13'-0⅛"	6 15/16"
HB29	26'-0¼"	12'-11¾"	6 15/16"
HB31	25'-9⅜"	12'-10⅜"	6⅜"
HB33	26'-1⅛"	13'-5⅛"	7⅛"
HB35	26'-7⅛"	13'-1¾"	6 11/16"
HB37	26'-8⅜"	13'-2"	6 15/16"
HB39	26'-10⅜"	13'-3 1/16"	6
HB41	27'-0⅛"	13'-4⅛"	5¾"
HB43	26'-7⅜"	13'-1⅜"	5⅞"
HB45	26'-9¼"	13'-2⅝"	5 15/16"
HB47	26'-11⅜"	13'-3⅝"	5 15/16"
HB56	25'-6¾"	12'-9¾"	6½"

MARK	"D"	"E"	"F"	"G"
HB2	26'-0⅝"	12'-11 11/16"	6 15/16"	mam
HB4	26'-10⅛"	13'-4⅜"	7⅜"	man
HB6	25'-6"	12'-9"	6½"	map
HB8	23'-7⅜"	11'-9 9/16"	5⅝"	mas
HB10	22'-7⅜"	11'-3 1/16"	4⅜"	mat
HB12	26'-11¾"	13'-5⅜"	7⅜"	man
HB14	26'-6⅜"	13'-3 5/16"	7⅛"	map
HB16	26'-7⅜"	13'-3 9/16"	7⅛"	map
HB20	23'-10⅜"	11'-10 5/16"	5⅞"	maw
HB22	21'-10"	10'-10⅜"	3¾"	may
HB24	21'-6⅜"	10'-9 9/16"	3⅜"	mba

MARK	"D"	"E"	"F"	"G"
HB26	26'-8⅜"	13'-3 11/16"	7⅛"	map
HB28	26'-1"	13'-0⅛"	6 15/16"	mam
HB30	26'-0¼"	12'-11¾"	6 15/16"	mam
HB32	25'-9⅛"	12'-10 5/16"	6⅜"	mbb
HB34	26'-9⅛"	13'-4 5/16"	7⅛"	mbc
HB36	25'-9¾"	12'-9 1/16"	6⅜"	mbd
HB38	25'-10¾"	12'-9¼"	6 15/16"	mbf
HB40	26'-0⅜"	12'-10¼"	6	mbg
HB42	26'-2⅛"	12'-11 5/16"	5¾"	mbh
HB44	26'-5¼"	13'-0⅜"	5⅞"	maw
HB46	26'-3⅜"	12'-11⅝"	5⅝"	maw
HB48	26'-1⅜"	12'-10⅝"	5 15/16"	maw

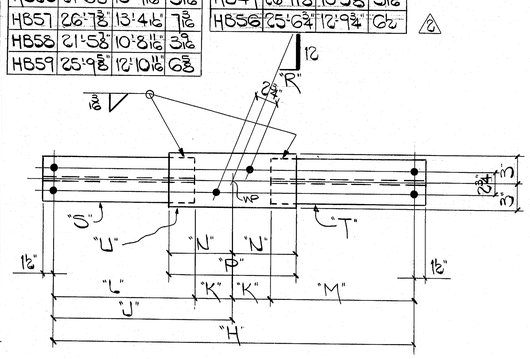

MARK	"H"	"J"	"K"	"L"	"M"	"N"	"P"	"R"	"S"	"T"	"U"
HB49	25'-6¾"	12'-9¾"	5¾"	12'-4"	12'-3¼"	9"	1'-6"	6½"	mcka	mbk	mcda
HB50	23'-7⅜"	11'-9 9/16"	5¾"	11'-4 5/16"	11'-5 1/16"	8½"	1'-5"	5⅝"	mbm	mbn	mcf
HB51	26'-7⅜"	13'-4 1/16"	6"	12'-10 1/16"	12'-9 9/16"	9½"	1'-7"	7 1/16"	mcm	mbp	mcd
HB52	26'-7⅜"	13'-3 9/16"	6"	12'-9 9/16"	12'-10 5/16"	9½"	1'-7"	7 1/16"	mbs	mbt	mcd
HB53	21'-5⅜"	10'-8 11/16"	4¾"	10'-3 15/16"	10'-4 1/16"	8"	1'-4"	3 9/16"	mcn	mbw	mcg
HB54	26'-8⅜"	13'-3 11/16"	6"	12'-9 11/16"	12'-10 1/16"	9½"	1'-7"	7 1/16"	mby	mca	mcd
HB55	25'-9⅜"	12'-10 11/16"	5¾"	12'-4 15/16"	12'-5 5/16"	9"	1'-6"	6⅜"	mcb	mcc	mch

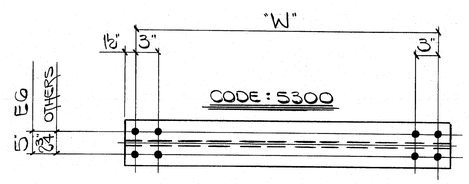

SHOP NOTE DIFFERENT WEIGHT WT'S.

MARK	"W"
E1	13'-6½"
E2	13'-11"
E3	14'-2 11/16"

MARK	"W"
E4	14'-6 11/16"
E5	14'-10 3/16"
E6	13'-6½"

BILL OF MATERIAL

NO.	MARK	DESCRIPTION	LENGTH	REMARKS	ITEM	SHIP WEIGHT EA.
One	HB46	WT5 × 11	26 6⅜		7/19	300
One	HB48	WT5 × 11	26 4⅜		7/21	298
6	mam	BAR 6 × ½	0 10 15/16	HB2, HB28, HB30	9/21	
15	man		0 10 11/16	HB4, HB12		
6	map		0 10⅛	HB6		
18	mab		0 10⅜	HB14, HB16, HB26		
6	mas		0 9⅛	HB8		
8	mat		0 8 3/16	HB10		
7	maw		0 9¼	HB18, HB20, HB44, HB46, HB48		
4	may		0 8⅜	HB22		
6	mba		0 8⅛	HB24		
3	mbb		0 10 15/16	HB32		
1	mbc		0 10 11/16	HB34		
1	mbd		0 10⅛	HB36		
1	mbf		0 9 15/16	HB38		
1	mbg		0 9 11/16	HB40		
1	mbh	BAR 6 × ½	0 9½	HB42	9/21	
		ONE - HORIZ. BRACE ASS'Y. - MK. HB49				290
1	mcka	WT5 × 11	12 5½		8/14	
1	mbk	WT5 × 11	12 4¾		8/15	
1	mcda	BAR 6 × ½	1 6		9/21	
		ONE - HORIZ. BRACE ASS'Y. - MK. HB50				267
1	mbm	WT5 × 11	11 5 15/16		9/5	
1	mbn	WT5 × 11	11 6 9/16		9/4	
1	mcf	BAR 6 × ½	1 5		9/21	
		ONE - HORIZ. BRACE ASS'Y. - MK. HB51				301
1	mbp	WT5 × 11	12 10 15/16		8/31	
1	mcm	WT5 × 11	12 11 15/16		8/28	
1	mcd	BAR 6 × ½	1 7			
		ONE - HORIZ. BRACE ASS'Y. - MK. HB52				301
1	mbs	WT5 × 11	12 11 15/16		8/30	
1	mbt	WT5 × 11	12 11 15/16		8/21	
1	mcd	BAR				
		ONE - HORIZ. BRACE ASS'Y. - MK. HB53				244
1	mbw	WT5 × 11	10 5 15/16		9/6	
1	mcn	WT5 × 11	10 5 1/16		9/7	
1	mcg	BAR 6 × ½	1 4		9/21	
		ONE - HORIZ. BRACE ASS'Y. - MK. HB54				301
1	mby	WT5 × 11	12 11 15/16		8/21	
1	mca	WT5 × 11	12 11 15/16		8/26	
1	mcd	BAR				
		ONE - HORIZ. BRACE ASS'Y. - MK. HB55				291
1	mcb	WT5 × 11	12 6⅜		9/2	
1	mcc	WT5 × 11	12 6 1/16		8/50	
1	mch	BAR 6 × ½	1 6		9/21	
114	E1	WT5 × 11	13 9½		8/25	152
3	E2		14 2		8/25	156
3	E3		14 5¾		8/22	159
3	E4		14 9½		8/21	163
3	E5	WT5 × 11	15 1¼		8/20	166
21	E6	WT7 × 21.5	13 9½		8/6	297

BILL OF MATERIAL

NO.	MARK	DESCRIPTION	LENGTH	REMARKS	ITEM	SHIP WEIGHT EA.
2	HB1	WT5 × 11	26 3½		7/24	289
11	HB3	△1	27 1½		7/6	298
6	HB5	△2	25 9		7/15	283
7	HB7	△2	23 10⅜		7/32	264
8	HB9		22 10⅜		7/31	252
4	HB11	△1	27 2¾		7/5	300
6	HB13		26 9⅜		7/16	295
7	HB15		26 10⅛		7/12	296
4	HB19	△1	24 1⅜		7/30	266
4	HB21		22 1		8/2	243
6	HB23		21 9⅜		8/5	240
7	HB25		26 11⅛		7/11	297
One	HB27		26 4		9/9	290
3	HB29		26 3¼		7/23	289
3	HB31		26 0⅛		7/27	286
One	HB33		27 2⅛		7/3	300
One	HB35		26 10⅛		7/17	296
One	HB37		26 11⅜		7/10	297
One	HB39		27 1⅜		7/7	298
One	HB41		27 3½		7/2	300
One	HB43		26 10⅛		7/19	296
One	HB45		27 0¼		7/1	297
One	HB47		27 2⅜		7/4	299
One	HB56	△2	25 3¾		7/13	284
One	HB57		26 10⅛		7/14	296
One	HB58		21 8⅜		8/4	239
One	HB59		25 9⅜		7/28	287
2	HB2	WT5 × 11	26 3⅛		7/24	298
11	HB4	△1	27 1½		7/6	307
6	HB6	△2	25 9		7/15	292
6	HB8	△2	23 10⅜		7/32	271
8	HB10		22 10⅜		7/31	259
4	HB12	△1	27 2¾		7/5	308
6	HB14		26 9⅜		7/16	304
6	HB16		26 10⅜		7/12	305
4	HB20	△1	24 1⅜		7/30	273
4	HB22		22 1		8/2	250
6	HB24		21 9⅜		8/5	246
6	HB26		26 11⅛		7/11	305
One	HB28		26 4		9/9	298
3	HB30		26 3¼		7/23	298
3	HB32		26 0⅛		7/27	295
One	HB34		27 0⅜		7/8	307
One	HB36		26 0¾		7/28	295
One	HB38		26 1¾		7/25	296
One	HB40		26 3⅝		7/22	298
One	HB42		26 5½		7/20	299
One	HB44	WT5 × 11	26 8¼		7/18	301

NO.			DATE
	△2	Rev. Revised span length control line	1-12-85
	△1	Rev. construction joint moved	11-19-84

HIGH STEEL STRUCTURES, INC.
1905 Old Philadelphia Pike
Lancaster, Pennsylvania 17603
Phone 717/299-5211
A Subsidiary of High Industries, Inc.

HORIZONTAL BRACING & CROSSFRAMES
I-395 BRIDGE OVER PENOBSCOT RIVER
I-395 BRIDGE STA. 164+60.00
PENOBSCOT COUNTY
STATE OF MAINE
DEPARTMENT OF TRANSPORTATION

STATE CONTRACT OR REF. NO. 6 CONTRACTOR CIANBRO CORP.
IN CHARGE: HINKLE MADE BY: C.S. CHK.D. BY: JLC DATE: 9-26-84
CONTRACT NUMBER: ME-84088-3 DRAWING NUMBER: 8 OF 47

FED. ROAD DIV. NO.	STATE	FED. AID PROJ. NO.
1	Me.	I-IG 395-8(82)176

SHOP NOTE

HOLES: 15/16"ϕ
BOLTS: NONE
PAINT: NONE

FOR GENERAL SHOP NOTES SEE DWG. N1

R95-185

CODE: 5500 (U.N.)

3" POLYTRACE 038

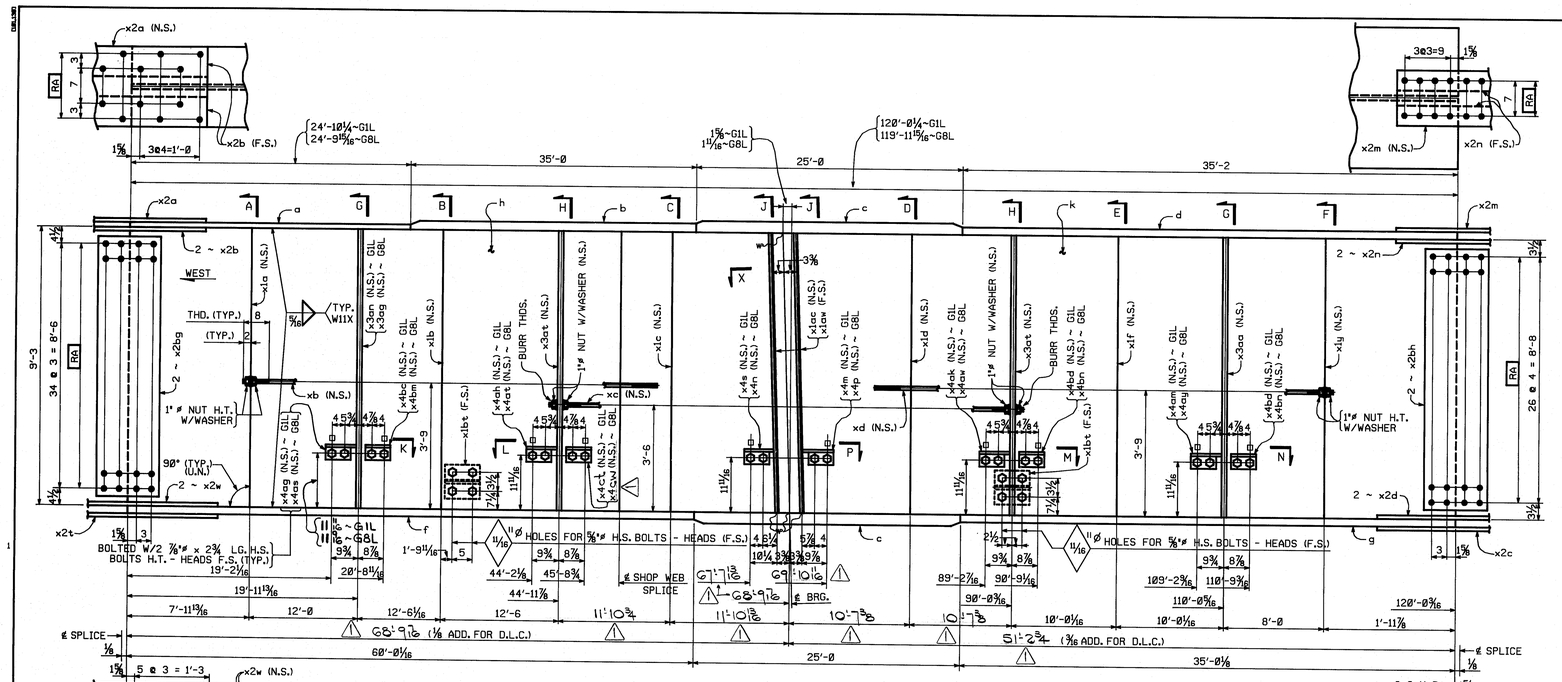

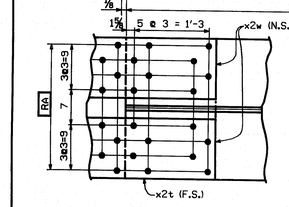

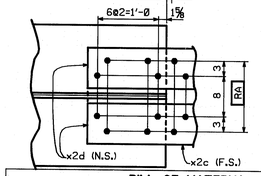

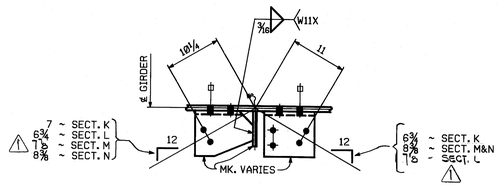

SECTION K,L,M&N

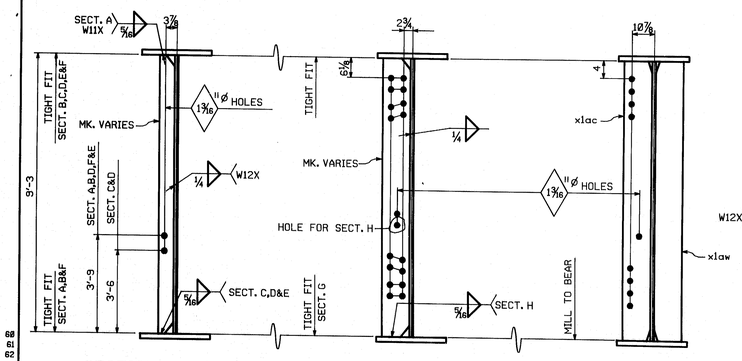

SECTION A,B,C,D,E&F

SECTION G&H

SECTION J

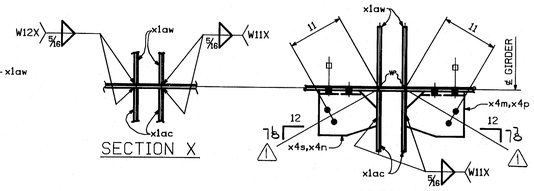

SECTION X

SECTION P

FED.ROAD DIV.NO.	STATE	FED.AID PROJ.NO.
1	ME.	I-IG-395-8(82)176

BILL OF MATERIAL

NO.	MARK	DESCRIPTION	LENGTH		REMARKS	ITEM	SHP. WEIGHT EA.
ONE	G1L	GIRDER					74,975
ONE	G8L	GIRDER			(OPP. HAND)		74,975
1	h	PL 111 x 3/4	50	0 5/16	G1L		
1	a	PL 16 x 1"	24	10 1/4	G1L		
1	a	PL 16 x 1"	24	9 15/16	G8L		
2	b	PL 28 x 1 1/2	35	0			
4	c	PL 28 x 2 1/4	25	0			
2	d	PL 28 x 1 1/2	35	2			
2	f	PL 28 x 1 1/2	60	0 1/16			
2	g	PL 28 x 1 1/2	35	0 1/8			
1	h	PL 111 x 3/4	50	0 1/16	G8L		
2	k	PL 111 x 3/4	70	0 3/16			
2	x2a	PL 16 x 1/2	2	6 1/2			
4	x2b	BAR 6 x 3/4	2	6 1/2			
2	x2c	PL 19 x 11/16	2	6 1/2			
4	x2d	BAR 8 x 7/8	2	6 1/2			
2	x2m	PL 11 x 1/2	2	0 1/2			
4	x2n	BAR 4 x 3/4	2	0 1/2			
2	x2t	PL 28 x 7/8	3	0 1/2			
4	x2w	PL 12 x 1"	3	0 1/2			
2	x1a	BAR 6 x 9/16	9	3			
2	x1b	BAR 6 x 9/16	↓	↓			
2	x1c	BAR 6 x 9/16					
2	x1d	BAR 5 x 1/2					
2	x1f	BAR 5 x 1/2					
2	x1y	BAR 7 x 9/16					
4	x1ac	PL 12 x 1 1/8	↓	↓			
4	x1aw	PL 12 x 1 1/8	9	3			
4	x1bt	WT 6X13	0	8			
2	x3aa	BAR 7 x 9/16	9	3			
1	x3ag	BAR 7 x 1/2	9	3	G8L		
1	x3an	BAR 7 x 1/2	9	3	G1L		
4	x3at	BAR 7 x 1/2	9	3			
1	x4m	PC. MC18x45.8	0	11 1/2	G1L		
1	x4n	↑	↑	↑	G8L		
1	x4p				G8L		
1	x4s				G1L		
1	x4ag				G1L		
1	x4ah				G1L		
1	x4ak				G1L		
1	x4am				G1L		
1	x4as				G8L		
1	x4at				G8L		
1	x4aw	↓	↓	↓	G8L		
1	x4ay		0	11 1/2	G8L		
1	x4az		0 0	10			
1	x4bc		0 0	10	G1L △1		
2	x4bd	PC. MC18x45.8	0	10	G1L		

BILL OF MATERIAL

NO.	MARK	DESCRIPTION	LENGTH		REMARKS	ITEM	SHP. WEIGHT EA.
2	xb	1"ø ROD	49	4	THD. BOTH ENDS	5/9	
2	xc	1"ø ROD	45	4 1/4		5/4	
2	xd	1"ø ROD	40	4		5/2	
1	x4ow	PL MC18 x 45.8	0	10			
1	x4em	PL MC18 x 45.8	0	10	G8L △1		
2	x4bn	PC. MC18x45.8	0	10	G8L		
16		1"ø STD. HEX NUT				B1/14	
16		WASH. FOR 1"ø H.S.B.				B1/12	
16		5/8"ø H.S. BOLTS	0	2 1/4		B1/3	
16		WASH. FOR 5/8"ø H.S.B.				B1/10	
40		7/8"ø H.S. BOLTS	0	2 3/4		B1/7	
40		WASH. FOR 7/8"ø H.S. BOLTS				B1/11	
4	x2bg	PL 105 x 1/2	1	0 1/2			
4	x2bh	PL 107 x 1/2	1	0 1/2			

SHOP NOTE

HOLES: 15/16" ø (UN)

BOLTS: AS NOTED

PAINT: SEE DWG. N1

FOR GENERAL SHOP NOTES, SEE DWG. N1.

FOR WEB CAMBER DIAGRAM, SEE DWG. W1.

CODE:4000

R95-186

NO.	REVISION	DATE
△1	Revised span length Control #16	1-12-85

HIGH STEEL STRUCTURES, INC.

1905 Old Philadelphia Pike
Lancaster, Pennsylvania 17603
Phone 717/299-523

A Subsidiary of High Industries, Inc.

GIRDERS — G1L,G8L

I-395 BRIDGE OVER PENOBSCOT RIVER

I-395 BRIDGE STA. 164+60.00

PENOBSCOT COUNTY

STATE OF MAINE

DEPARTMENT OF TRANSPORTATION

STATE CONTRACT OR REF.NO. 6 CONTRACTOR CIANBRO CORP.

IN CHARGE: HINKLE MADE BY: S.J.A. CHK.D. BY: JLC DATE: 9-27-84

CONTRACT NUMBER: ME-84088-3 DRAWING NUMBER: 9 OF 47

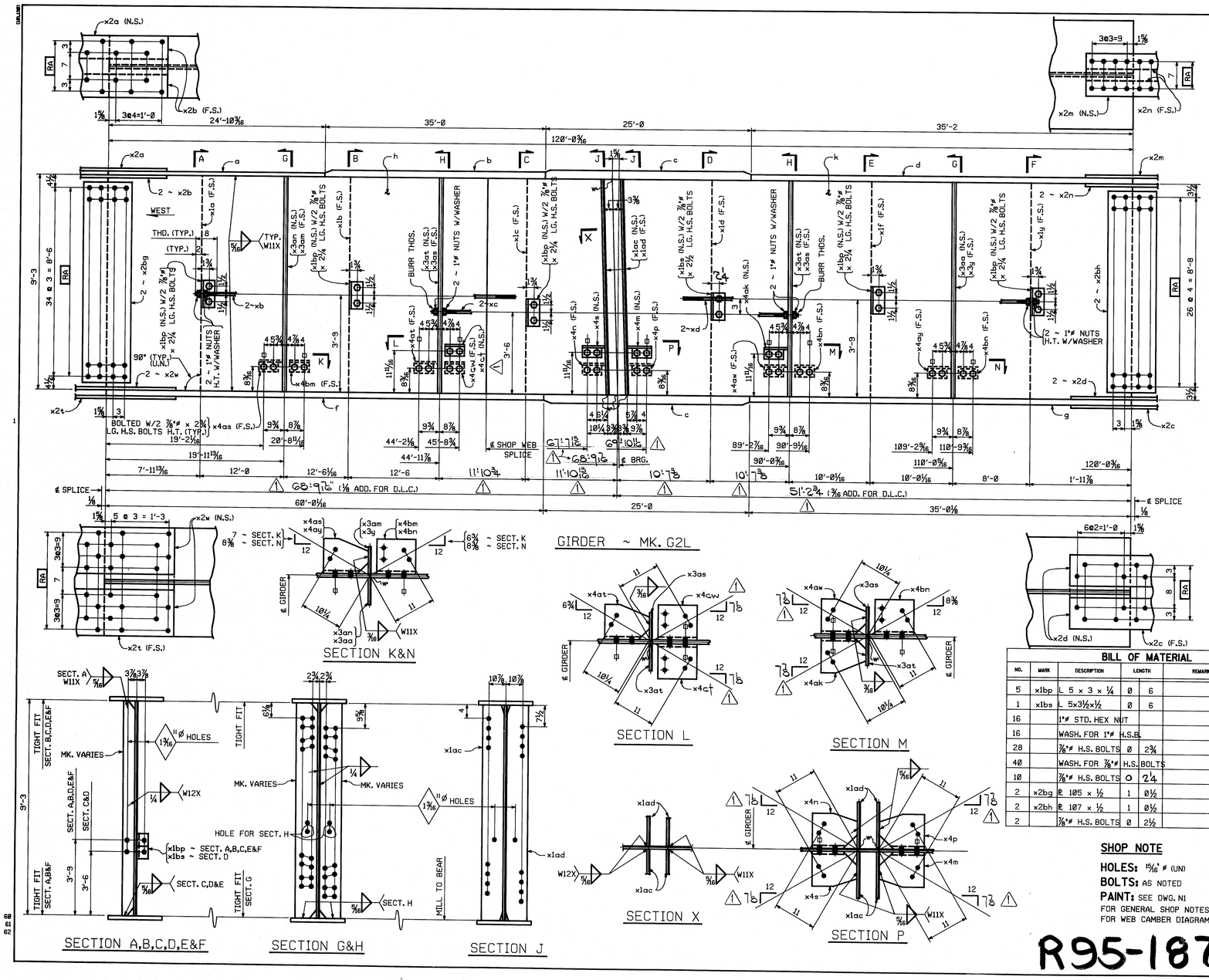

FED.ROAD DIV.NO.	STATE	FED.AID PROJ.NO.
1	ME.	I-IG-395-8(82)176

BILL OF MATERIAL

NO.	MARK	DESCRIPTION	LENGTH		REMARKS	ITEM	SHIP. WEIGHT EA.
ONE	G2L	GIRDER					75965
1	a	ℙ 16 x 1"	24	10 3/16			
1	b	ℙ 28 x 1½	35	0			
2	c	ℙ 28 x 2¼	25	0			
1	d	ℙ 28 x 1½	35	2			
1	f	ℙ 28 x 1½	60	0 1/16			
1	g	ℙ 28 x 1½	35	0⅛			
1	h	ℙ 111 x ¾	50	0¼			
1	k	ℙ 111 x ¾	70	0 3/16			
1	x2a	ℙ 16 x ½	2	6½			
2	x2b	BAR 6 x ¾	2	6½			
1	x2c	ℙ 19 x 11/16	2	6½			
2	x2d	BAR 8 x ⅞	2	6½			
1	x2m	ℙ 11 x ½	2	0½			
2	x2n	BAR 4 x ¾	2	0½			
1	x2t	ℙ 28 x ⅞	3	0½			
2	x2w	ℙ 12 x 1"	3	0½			
1	x1a	BAR 6 x 9/16	9	3			
1	x1b	BAR 6 x 9/16	↑	↑			
1	x1c	BAR 6 x 9/16					
1	x1d	BAR 5 x ½					
1	x1f	BAR 5 x ½					
1	x1y	BAR 7 x 9/16					
2	x1ac	ℙ 12 x 1⅛					
2	x1ad	ℙ 12 x 1⅛					
1	x3y	BAR 7 x 9/16					
1	x3aa	BAR 7 x 9/16					
1	x3am	BAR 7 x ½					
1	x3an	BAR 7 x ½					
2	x3as	BAR 7 x ½	↓	↓			
2	x3at	BAR 7 x ½	9	3			
1	x4m	PC. MC18x45.8	0	11½			
1	x4n		↑	↑			
1	x4p						
1	x4s						
1	x4ak						
1	x4as						
1	x4at						
1	x4aw		↓	↓			
1	x4ay		0	11½			
1	x4ct		0	10			
	x4cw		0	10			
	x4bm		0	10			
2	x4bn	PC. MC18x45.8	0	10			
2	xb	1"ø ROD	49	4			59
2	xc	1"ø ROD	45	4¼	THD. BOTH ENDS		54
2	xd	1"ø ROD	40	4			53

BILL OF MATERIAL

NO.	MARK	DESCRIPTION	LENGTH		REMARKS	ITEM	SHIP. WEIGHT EA.
5	x1bp	L 5 x 3 x ¼	0	6			
1	x1bs	L 5x3½x½	0	6			
16		1"ø STD. HEX NUT				B1 14	
16		WASH. FOR 1"ø H.S.B.				B1 12	
28		7/8"ø H.S. BOLTS	0	2¾		B1 7	
40		WASH. FOR 7/8"ø H.S. BOLTS				B1 11	
10		7/8"ø H.S. BOLTS	0	2¼		B1 5	
2	x2bg	ℙ 105 x ½	1	0½			
2	x2bh	ℙ 107 x ½	1	0½			
2		7/8"ø H.S. BOLTS	0	2½		B1 6	

SHOP NOTE

HOLES: 15/16"ø (UN)
BOLTS: AS NOTED
PAINT: SEE DWG. N1
FOR GENERAL SHOP NOTES, SEE DWG. N1.
FOR WEB CAMBER DIAGRAM, SEE DWG. W C1.

R95-187

CODE:4000

NO.	REVISION	DATE
△1	Revised span length. Control #16	1-12-85

HIGH STEEL STRUCTURES, INC.
1905 Old Philadelphia Pike
Lancaster, Pennsylvania 17603
Phone 717/293-523
A Subsidiary of High Industries, Inc.

GIRDER G2L
I-395 BRIDGE OVER PENOBSCOT RIVER
I-395 BRIDGE STA. 164+60.00
PENOBSCOT COUNTY
STATE OF MAINE
DEPARTMENT OF TRANSPORTATION

STATE CONTRACT OR REF.NO. 6 CONTRACTOR CIANBRO CORP.
IN CHARGE: HINKLE MADE BY: S.J.A. CHK.D. BY: JLC DATE: 9-28-84
CONTRACT NUMBER: ME-84088-3 DRAWING NUMBER: 10 OF 47

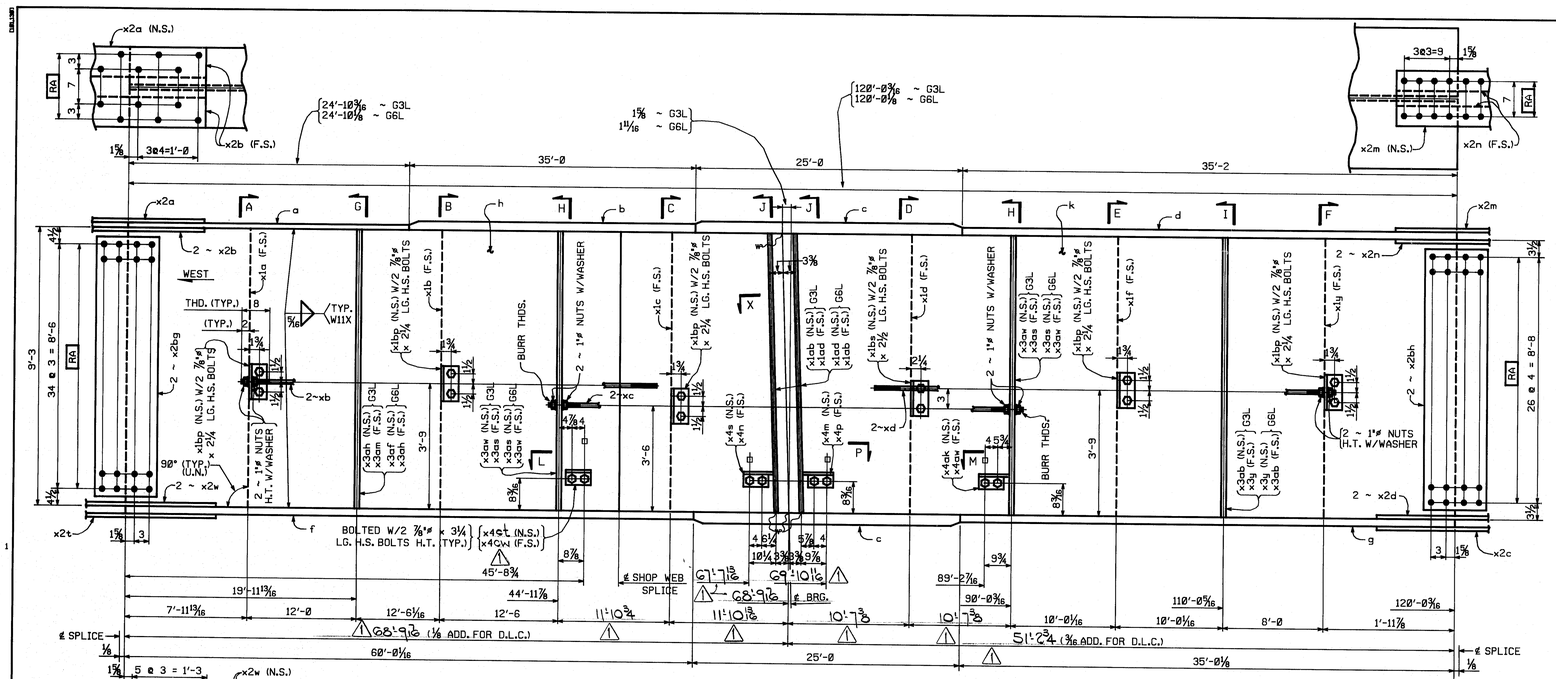

FED.ROAD DIV.NO.	STATE	FED.AID PROJ.NO.
1	ME.	I-IG-395-8(821)176

BILL OF MATERIAL

NO.	MARK	DESCRIPTION	LENGTH		REMARKS	ITEM	SHP. WEIGHT EA.
ONE	G3L	GIRDER					75,605
ONE	G6L	GIRDER					75,605
1	a	ℙ 16 x 1"	24	10 3/16	G3L		
1	a	ℙ 16 x 1"	24	10 1/8	G6L		
2	b	ℙ 28 x 1½	35	0			
4	c	ℙ 28 x 2¼	25	0			
2	d	ℙ 28 x 1½	35	2			
2	f	ℙ 28 x 1½	60	0 1/16			
2	g	ℙ 28 x 1½	35	0 1/8			
1	h	ℙ 111 x ¾	50	0¼	G3L		
1	h	ℙ 111 x ¾	50	0 3/16	G6L		
2	k	ℙ 111 x ¾	70	0 3/16			
2	x2a	ℙ 16 x ½	2	6½			
4	x2b	BAR 6 x ¾	2	6½			
2	x2c	ℙ 19 x 11/16	2	6½			
4	x2d	BAR 8 x ⅞	2	6½			
2	x2m	ℙ 11 x ½	2	0½			
4	x2n	BAR 4 x ¾	2	0½			
2	x2t	ℙ 28 x ⅞	3	0½			
4	x2w	ℙ 12 x 1"	3	0½			
2	x1a	BAR 6 x 9/16	9	3			
2	x1b	BAR 6 x 9/16	↑	↑			
2	x1c	BAR 6 x 9/16					
2	x1d	BAR 5 x ½					
2	x1f	BAR 5 x ½					
2	x1y	BAR 7 x 9/16					
4	x1ab	ℙ 12 x 1⅛					
4	x1ad	ℙ 12 x 1⅛					
2	x3y	BAR 7 x 9/16					
2	x3ab	BAR 7 x 9/16					
1	x3am	BAR 7 x ½				G3L	
1	x3af	↕				G6L	
4	x3as						
2	x3ah						
4	x3aw	BAR 7 x ½	9	3			
2	x4m	PC. MC18x45.8	0	11½			
2	x4n	↕	↕	↕			
2	x4p						
2	x4s						
2	x4ak						
2	x4aw		0	11½			
2	x4ct	↕	0	10			
2	x4cw	PC. MC18x45.8	0	10			
4	xb	1"ø ROD	49	4		5/9	
4	xc	1"ø ROD	45	4¼	THD. BOTH ENDS	5/4	
4	xd	1"ø ROD	40	4		5/2	

BILL OF MATERIAL

NO.	MARK	DESCRIPTION	LENGTH		REMARKS	ITEM	SHP. WEIGHT EA.
10	x1bp	L 5 x 3 x ¼	0	6			
2	x1bs	L 5x3½x½	0	6			
32		1"ø STD. HEX NUT				B1/14	
32		WASH. FOR 1"ø H.S.B.				B1/12	
16		⅞"ø H.S. BOLTS	0	3¼		B1/8	
20		⅞"ø H.S. BOLTS	0	2¼		B1/5	
40		WASH. FOR ⅞"ø H.S. BOLTS				B1/11	
4	x2bg	ℙ 105 x ½	1	0½			
4	x2bh	ℙ 107 x ½	1	0½			
4		⅞"ø H.S. BOLTS	0	2½		B1/6	

SHOP NOTE

HOLES: 15/16"ø (UN)
BOLTS: AS NOTED
PAINT: SEE DWG. N1
FOR GENERAL SHOP NOTES, SEE DWG. N1.
FOR WEB CAMBER DIAGRAM, SEE DWG. WC1.

R95-188

CODE:4000

NO.	REVISION	DATE
1	Revised span length control # 16	1-12-85

HIGH STEEL STRUCTURES, INC.
1905 Old Philadelphia Pike
Lancaster, Pennsylvania 17603
Phone 717/299-521
A Subsidiary of High Industries, Inc.

GIRDERS G3L,G6L
I-395 BRIDGE OVER PENOBSCOT RIVER
I-395 BRIDGE STA. 164+60.00
PENOBSCOT COUNTY
STATE OF MAINE
DEPARTMENT OF TRANSPORTATION

STATE CONTRACT OR REF.NO. 6 CONTRACTOR CIANBRO CORP.
IN CHARGE: HINKLE MADE BY: S.J.A. CHK.D. BY: JLC DATE: 9-28-84
CONTRACT NUMBER: ME-84088-3 DRAWING NUMBER: 11 OF 47

FED.ROAD DIV.NO.	STATE	FED.AID PROJ.NO.
1	ME.	I-IG-395-8(82)176

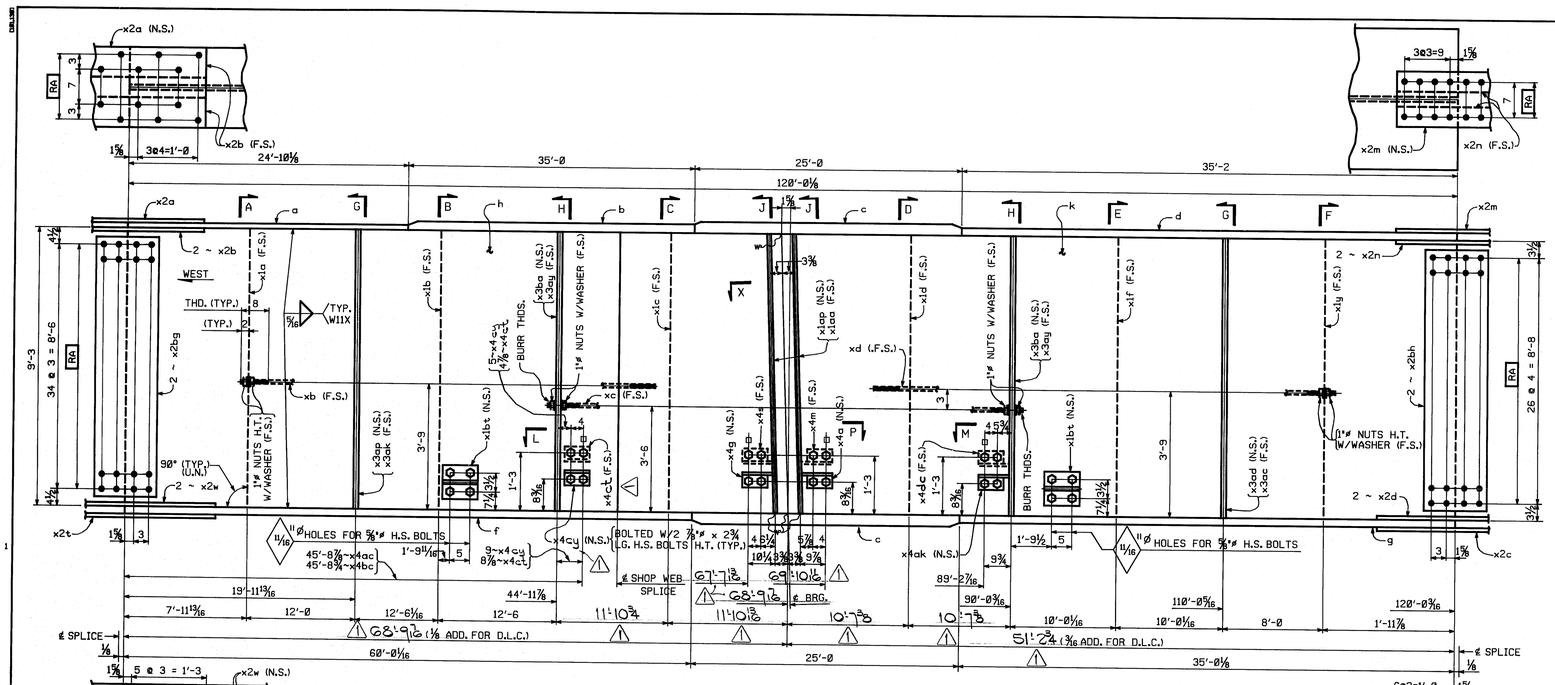

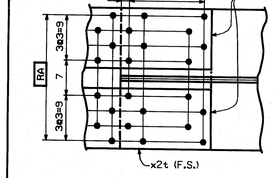

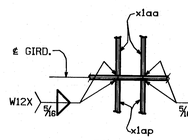

SECTION X

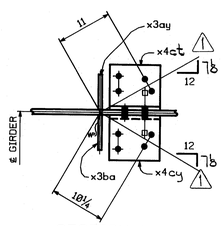

SECTION L

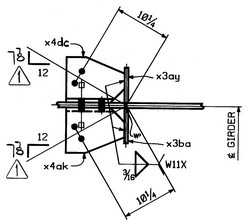

SECTION M

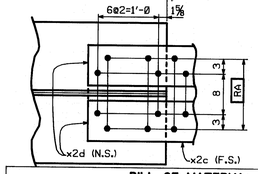

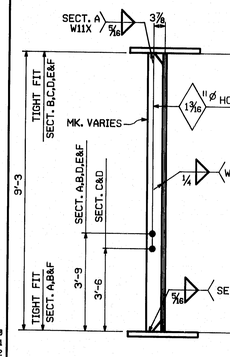

SECTION A,B,C,D,E&F

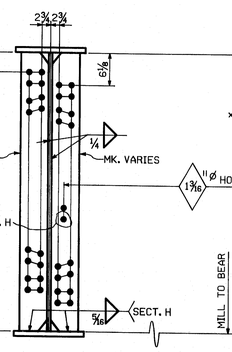

SECTION G&H

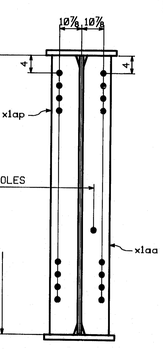

SECTION J

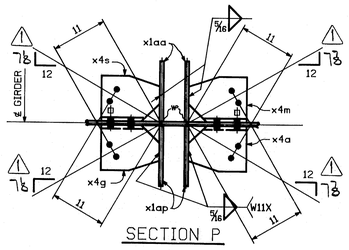

SECTION P

BILL OF MATERIAL

NO.	MARK	DESCRIPTION	LENGTH		REMARKS	ITEM	SHP. WEIGHT EA.
ONE	G4L	GIRDER					75275
1	a	ℙ 16 x 1"	24	10 1/16			
1	b	ℙ 28 x 1 1/2	35	0			
2	c	ℙ 28 x 2 1/4	25	0			
1	d	ℙ 28 x 1 1/2	35	2			
1	f	ℙ 28 x 1 1/2	60	0 1/16			
1	g	ℙ 28 x 1 1/2	35	0 1/8			
1	h	ℙ 111 x 3/4	50	0 3/16			
1	k	ℙ 111 x 3/4	70	0 3/16			
1	x2a	ℙ 16 x 1/2	2	6 1/2			
2	x2b	BAR 6 x 3/4	2	6 1/2			
1	x2c	ℙ 19 x 11/16	2	6 1/2			
2	x2d	BAR 8 x 7/8	2	6 1/2			
1	x2m	ℙ 11 x 1/2	2	0 1/2			
2	x2n	BAR 4 x 3/4	2	0 1/2			
1	x2t	ℙ 28 x 7/8	3	0 1/2			
2	x2w	ℙ 12 x 1"	3	0 1/2			
1	x1a	BAR 6 x 9/16	9	3			
1	x1b	BAR 6 x 9/16	↕	↕			
1	x1c	BAR 6 x 9/16	↕	↕			
1	x1d	BAR 5 x 1/2	↕	↕			
1	x1f	BAR 5 x 1/2	↕	↕			
1	x1y	BAR 7 x 9/16	↕	↕			
2	x1aa	ℙ 12 x 1 1/8	↕	↕			
2	x1ap	ℙ 12 x 1 1/8	↕	↕			
1	x3ac	BAR 7 x 9/16	↕	↕			
1	x3ad	BAR 7 x 9/16	↕	↕			
1	x3ak	BAR 7 x 1/2	↕	↕			
1	x3ap	↕	↕	↕			
2	x3ay	↕	↕	↕			
2	x3ba	BAR 7 x 1/2	9	3			
2	x1bt	WT 6 x 13	0	8			
1	x4m	PC. MC18x45.8	0	11 1/2			
1	x4a	↕	↕	↕			
1	x4g	↕	↕	↕			
1	x4s	↕	↕	↕			
1	x4ak	↕	0	11 1/2			
1	x4ct	↕	0	10			
1	x4cy	PC. MC18x45.8	0	9 1/2			
1	x4dc	PC. MC18x45.8	0	11 1/2			
1	xb	1" ø ROD	49	4			5/9
1	xc	1" ø ROD	45	4 1/4	THD. BOTH ENDS		5/4
1	xd	1" ø ROD	40	4			5/2

BILL OF MATERIAL

NO.	MARK	DESCRIPTION	LENGTH		REMARKS	ITEM	SHP. WEIGHT EA.
8		1" ø STD. HEX NUT				B1/14	
8		WASH. FOR 1" ø H.S.B.				B1/12	
8		5/8" ø H.S. BOLTS	0	2 1/4		B1/3	
8		WASH. FOR 5/8" ø H.S. BOLTS				B1/10	
16		7/8" ø H.S. BOLTS	0	2 3/4		B1/7	
16		WASH. FOR 7/8" ø H.S. BOLTS				B1/11	
2	x2bg	ℙ 105 x 1/2	1	0 1/2			
2	x2bh	ℙ 107 x 1/2	1	0 1/2			

NO.	REVISION	DATE
1	Revised span length control #16	1-12-85

HIGH STEEL STRUCTURES, INC.
1905 Old Philadelphia Pike
Lancaster, Pennsylvania 17603
Phone 717/299-5211
A Subsidiary of High Industries, Inc.

GIRDER G4L
I-395 BRIDGE OVER PENOBSCOT RIVER
I-395 BRIDGE STA. 164+60.00
PENOBSCOT COUNTY
STATE OF MAINE
DEPARTMENT OF TRANSPORTATION

STATE CONTRACT OR REF.NO. 6 CONTRACTOR CIANBRO CORP.
IN CHARGE: HINKLE MADE BY: S.J.A. CHK.D. BY: JLC DATE: 9-28-84
CONTRACT NUMBER: ME-84088-3 DRAWING NUMBER: 12 OF 47

SHOP NOTE

HOLES: 15/16" ø (UN)
BOLTS: AS NOTED
PAINT: SEE DWG. N1
FOR GENERAL SHOP NOTES, SEE DWG. N1.
FOR WEB CAMBER DIAGRAM, SEE DWG. WC1.

R95-189

CODE: 4000

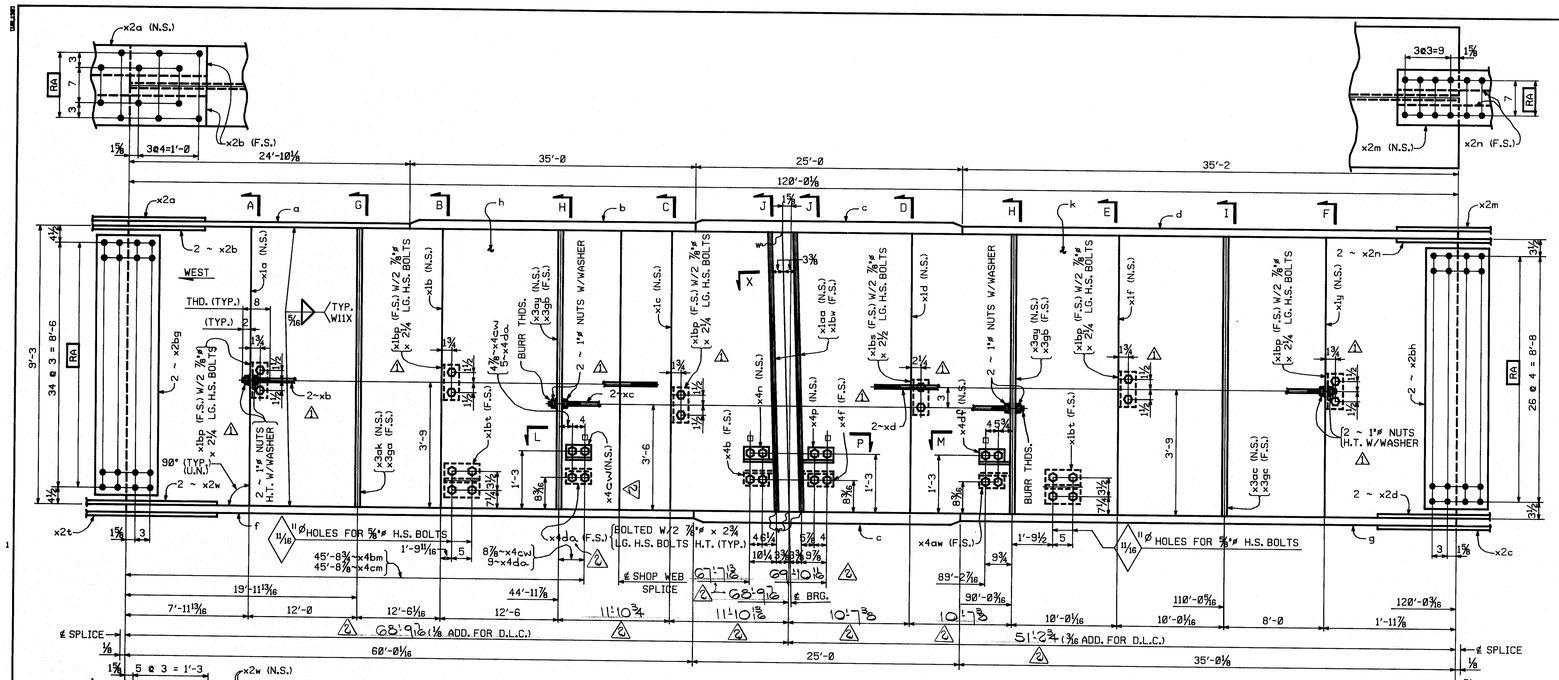

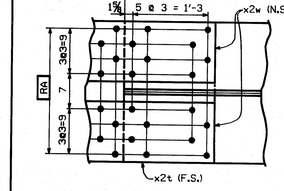

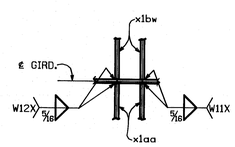

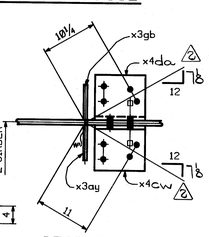

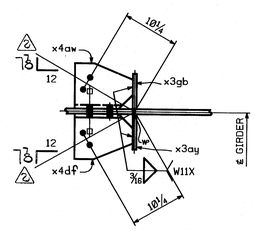

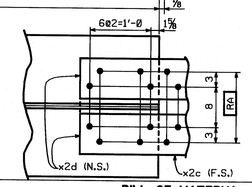

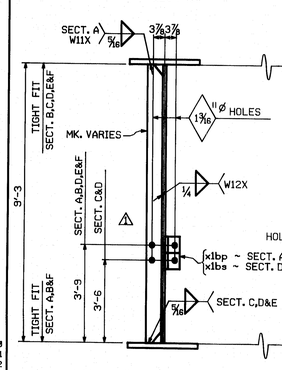

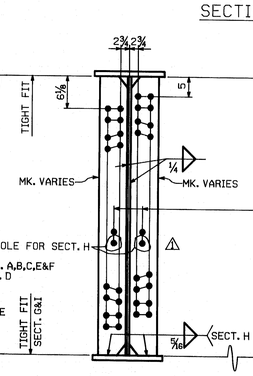

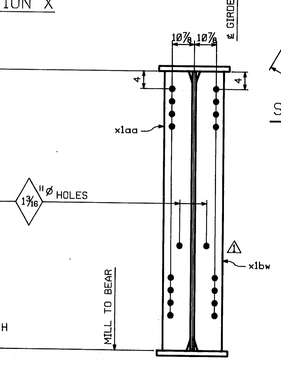

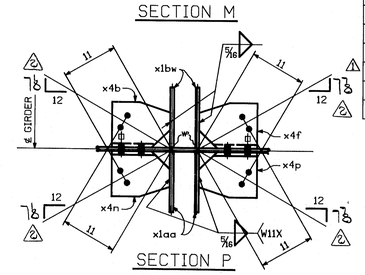

FED.ROAD DIV.NO.	STATE	FED.AID PROJ.NO.
1	ME.	I-IG-395-8(82)176

BILL OF MATERIAL

NO.	MARK	DESCRIPTION	LENGTH		REMARKS	ITEM	SHIP. WEIGHT EA.
ONE	G5L	GIRDER					75,000
1	a	℞ 16 x 1"	24	10⅛			
1	b	℞ 28 x 1½	35	0			
2	c	℞ 28 x 2¼	25	0			
1	d	℞ 28 x 1½	35	2			
1	f	℞ 28 x 1½	60	0 1/16			
1	g	℞ 28 x 1½	35	0⅛			
1	h	℞ 111 x ¾	50	0 3/16			
1	k	℞ 111 x ¾	70	0 3/16			
1	x4df	PC.MC18x45.8	0	11½			
1	x2a	℞ 16 x ½	2	6½			
2	x2b	BAR 6 x ¾	2	6½			
1	x2c	℞ 19 x 11/16	2	6½			
2	x2d	BAR 8 x ⅞	2	6½			
1	x2m	℞ 11 x ½	2	0½			
2	x2n	BAR 4 x ¾	2	0½			
1	x2t	℞ 28 x ⅞	3	0½			
2	x2w	℞ 12 x 1"	3	0½			
1	x1a	BAR 6 x 9/16	9	3			
1	x1b	BAR 6 x 9/16	↑	↑			
1	x1c	BAR 6 x 9/16					
1	x1d	BAR 5 x ½					
1	x1f	BAR 5 x ½					
1	x1y	BAR 7 x 9/16					
2	x1aa	℞ 12 x 1⅛					
2	x1bw	℞ 12 x 1⅛					
1	x3ac	BAR 7 x 9/16					
1	x3gc	BAR 7 x 9/16					
1	x3ak	BAR 7 x ½					
1	x3ga						
2	x3ay		↓	↓			
2	x3gb	BAR 7 x ½	9	3			
2	x2bg	℞ 105 x ½	1	0½			
2	x2bh	℞ 107 x ½	1	0½			
1	x4n	PC. MC18x45.8	0	11½			
1	x4b		↑	↑			
1	x4p						
1	x4f		↓	↓			
1	x4aw		0	11½			
1	x4da		0	10			
1	x4cw	PC. MC18x45.8	0	9½			
2	x1bt	WT 6X13	0	8			
2	x6	1"ø ROD	49	4	THD. BOTH ENDS		
2	x5	1"ø ROD	45	4			
2	x4	1"ø ROD	40	4			

BILL OF MATERIAL

NO.	MARK	DESCRIPTION	LENGTH		REMARKS	ITEM	SHIP. WEIGHT EA.
5	x1bp	L 5 x 3 x ¼	0	6			
1	x1bs	L 5x3½x½	0	6			
16		1"ø STD. HEX NUT				B1/14	
16		WASH. FOR 1"ø H.S.B.				B1/12	
8		⅝"ø H.S. BOLTS	0	2¼		B1/3	
8		WASH. FOR ⅝"ø	H.S.	BOLTS		B1/10	
16		⅞"ø H.S. BOLTS	0	2¾		B1/7	
28		WASH. FOR ⅞"ø	H.S.	BOLTS		B1/11	
10		⅞"ø H.S. BOLTS	0	2¼		B1/5	
2		⅞"ø H.S. BOLTS	0	2½		B1/6	

SHOP NOTE

HOLES: 15/16" ø (UN)
BOLTS: AS NOTED
PAINT: SEE DWG. N1
FOR GENERAL SHOP NOTES, SEE DWG. N1.
FOR WEB CAMBER DIAGRAM, SEE DWG. WC1.

R95-190

CODE:4000

NO.	REVISION	DATE
2	Revised span length Control #16	1-12-85
1	CONTRACT REVISION CONTROL # 14	9-20-84

HIGH STEEL STRUCTURES, INC.
1905 Old Philadelphia Pike
Lancaster, Pennsylvania 17603
Phone 717/299-5121
A Subsidiary of High Industries, Inc.

GIRDER G5L
I-395 BRIDGE OVER PENOBSCOT RIVER
I-395 BRIDGE STA. 164+60.00
PENOBSCOT COUNTY
STATE OF MAINE
DEPARTMENT OF TRANSPORTATION

STATE CONTRACT OR REF.NO. 6 CONTRACTOR CIANBRO CORP.
IN CHARGE: HINKLE MADE BY: S.J.A. CHK.D. BY: JLC DATE: 9-28-84
CONTRACT NUMBER: ME-84088-3 DRAWING NUMBER: 13 OF 47

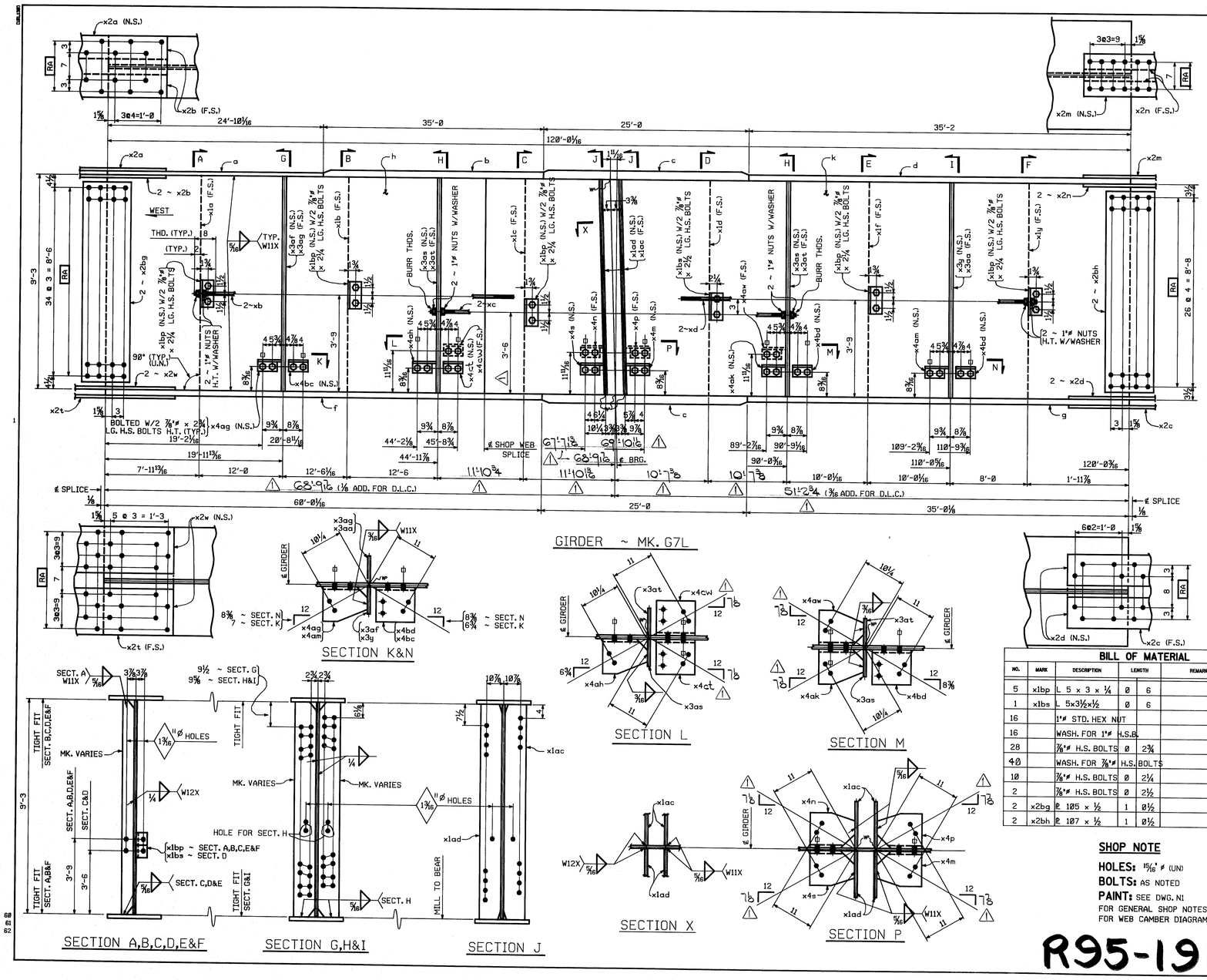

FED.ROAD DIV.NO.	STATE	FED.AID PROJ.NO.
1	ME.	I-IG-395-8(82)176

BILL OF MATERIAL

NO.	MARK	DESCRIPTION	LENGTH		REMARKS	ITEM	SHP. WEIGHT EA.
ONE	G7L	GIRDER					7595
1	a	ℙ 16 x 1"	24	10 1/16			
1	b	ℙ 28 x 1½	35	0			
2	c	ℙ 28 x 2¼	25	0			
1	d	ℙ 28 x 1½	35	2			
1	f	ℙ 28 x 1½	60	0 1/16			
1	g	ℙ 28 x 1½	35	0⅛			
1	h	ℙ 111 x ¾	50	0⅛			
1	k	ℙ 111 x ¾	70	0 3/16			
1	x2a	ℙ 16 x ½	2	6½			
2	x2b	BAR 6 x ¾	2	6½			
1	x2c	ℙ 19 x 1 1/16	2	6½			
2	x2d	BAR 8 x ⅞	2	6½			
1	x2m	ℙ 11 x ½	2	0½			
2	x2n	BAR 4 x ¾	2	0½			
1	x2t	ℙ 28 x ⅞	3	0½			
2	x2w	ℙ 12 x 1"	3	0½			
1	x1a	BAR 6 x 9/16	9	3			
1	x1b	BAR 6 x 9/16	↑	↑			
1	x1c	BAR 6 x 9/16					
1	x1d	BAR 5 x ½					
1	x1f	BAR 5 x ½					
1	x1y	BAR 7 x 9/16					
2	x1ac	ℙ 12 x 1⅛					
2	x1ad	ℙ 12 x 1⅛					
1	x3y	BAR 7 x 9/16					
1	x3aa	BAR 7 x 9/16					
1	x3af	BAR 7 x ½					
1	x3ag	BAR 7 x ½					
2	x3as	BAR 7 x ½	↓	↓			
2	x3at	BAR 7 x ½	9	3			
1	x4m	PC. MC18x45.8	0	11½			
1	x4n		↑	↑			
1	x4p						
1	x4s						
1	x4ak						
1	x4ag						
1	x4ah						
1	x4aw		↓	↓			
1	x4am		0	11½			
1	x4ct		0	10			
1	x4bc		0	10			
1	x4cw		0	10			
2	x4bd	PC. MC18x45.8	0	10			
2	xb	1"ø ROD	49	4			9
2	xc	1"ø ROD	45	4¼	THD. BOTH ENDS		4
2	xd	1"ø ROD	40	4			2

BILL OF MATERIAL

NO.	MARK	DESCRIPTION	LENGTH		REMARKS	ITEM	SHP. WEIGHT EA.
5	x1bp	L 5 x 3 x ¼	0	6			
1	x1bs	L 5x3½x½	0	6			
16		1"ø STD. HEX NUT				B1 14	
16		WASH. FOR 1"ø H.S.B.				B1 12	
28		⅞"ø H.S. BOLTS	0	2¾		B1 7	
40		WASH. FOR ⅞"ø H.S. BOLTS				B1 11	
10		⅞"ø H.S. BOLTS	0	2¼		B1 5	
2		⅞"ø H.S. BOLTS	0	2½		B1 6	
2	x2bg	ℙ 105 x ½	1	0½			
2	x2bh	ℙ 107 x ½	1	0½			

SHOP NOTE

HOLES: 15/16"ø (UN)
BOLTS: AS NOTED
PAINT: SEE DWG. N1
FOR GENERAL SHOP NOTES, SEE DWG. N1.
FOR WEB CAMBER DIAGRAM, SEE DWG. WC1.

R95-191

CODE:4000

NO.	REVISION	DATE
△	Revised span length Control #12	1-12-85

HIGH STEEL STRUCTURES, INC.
1905 Old Philadelphia Pike
Lancaster, Pennsylvania 17603
Phone 717/299-523
A Subsidiary of High Industries, Inc.

GIRDER G7L
I-395 BRIDGE OVER PENOBSCOT RIVER
I-395 BRIDGE STA. 164+60.00
PENOBSCOT COUNTY
STATE OF MAINE
DEPARTMENT OF TRANSPORTATION

STATE CONTRACT OR REF.NO. 6 CONTRACTOR CIANBRO CORP.
IN CHARGE: HINKLE MADE BY: S.J.A. CHK.D. BY: JLC DATE: 9-28-84
CONTRACT NUMBER: ME-84088-3 DRAWING NUMBER: 14 OF 47

FED. ROAD DIV. NO.	STATE	FED. AID PROJ. NO.
1	ME	IG-395-8(82)176

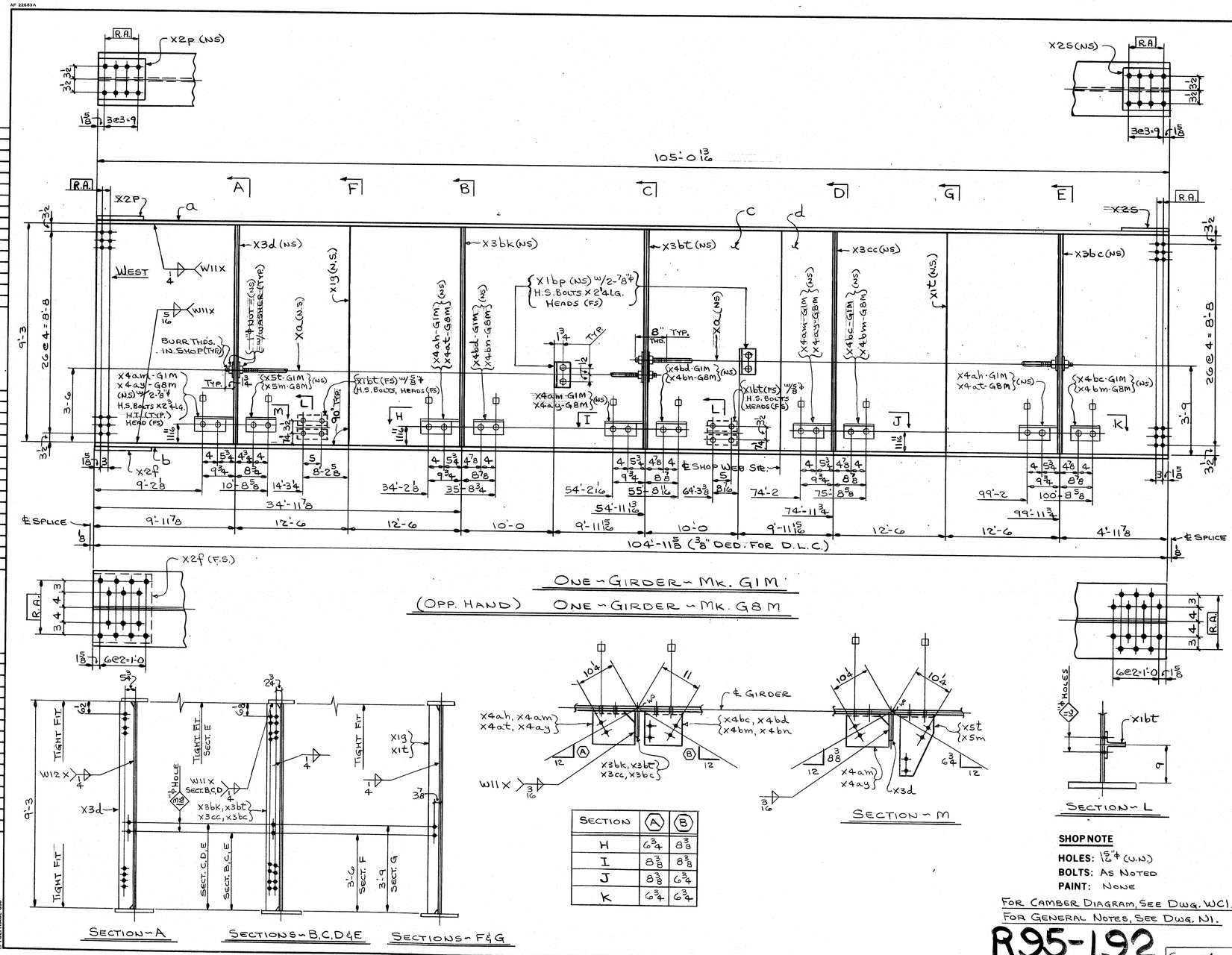

SECTION	(A)	(B)
H	6 3/4	8 3/8
I	8 3/8	8 3/8
J	8 3/8	6 3/4
K	6 3/4	6 3/4

SHOP NOTE

HOLES: 15/16"ϕ (U.N.)

BOLTS: AS NOTED

PAINT: NONE

FOR CAMBER DIAGRAM, SEE DWG. WC1.

FOR GENERAL NOTES, SEE DWG. N1.

R95-192

CODE: 4000

BILL OF MATERIAL

NO.	MARK	DESCRIPTION	LENGTH		REMARKS	ITEM	TOTAL WEIGHT
ONE	G1M	GIRDER					41,870
ONE	G8M	GIRDER			OPP. HAND		41,870
2	a	PL. 14 x 3/4	105	0 13/16			
2	b	PL. 20 x 1 5/16	104	11 5/8			
2	c	PL. 111 x 11/16	70	0 9/16			
2	d	PL. 111 x 1 1/16	35	0 1/4			
2	X2f	PL. 19 x 3/16	1	3 1/8	FILL		
2	X2p	PL. 11 x 3/4	1	0 1/8	FILL		
2	X2s	PL. 11 x 1/2	1	0 1/8	FILL		
4	Xa	1"ϕ ROD	45	4	THD. BOTH ENDS	5/3	
16		1"ϕ STD. HEX NUTS				81/14	
16		WASH. FOR 1"ϕ NUTS				81/12	
4	X1bP	L5 x 3 x 1/4	0	6			
2	X1g	BAR 5 x 1/2	9	3			
2	X1t	BAR 5 x 1/2					
2	X3d	BAR 7 x 1/2					
2	X3bk						
2	X3bt						
2	X3cc						
2	X3bc	BAR 7 x 1/2	9	3			
4	X1bt	WT 6 X 13	0	8			
2	X4ah	PL MC18 x 45.8	0	11 1/2	G1M		
2	X4at		0	11 1/2	G8M		
3	X4am		0	11 1/2	G1M		
3	X4ay		0	11 1/2	G8M		
2	X4bc		0	10	G1M		
2	X4bd		0	10	G1M		
2	X4bm		0	10	G8M		
2	X4bn		0	10	G8M		
ONE	X5t		0	8 3/4	G1M		
ONE	X5m	PL MC18 x 45.8	0	8 3/4	G8M		
8		7/8"ϕ H.S. BOLTS	0	2 1/4		81/5	
40		7/8"ϕ H.S. BOLTS	0	2 3/4		81/7	
48		WASH. FOR 7/8"ϕ H.S. BOLTS				81/11	
16		5/8"ϕ H.S. BOLTS	0	2 1/4		81/3	
16		WASH. FOR 5/8"ϕ H.S. BOLTS				81/10	

NO.	REVISION	DATE

HIGH STEEL STRUCTURES, INC.
1905 Old Philadelphia Pike
Lancaster, Pennsylvania 17603
Phone 717/299-5211
A Subsidiary of High Industries, Inc.

GIRDERS G1M & G8M
I-395 BRIDGE OVER PENOBSCOT RIVER
I-395 BRIDGE STA. 164+60.00
PENOBSCOT COUNTY
STATE OF MAINE
DEPARTMENT OF TRANSPORTATION

STATE CONTRACT OR REF. NO. 6 CONTRACTOR CIANBRO CORP.

IN CHARGE: HINKLE MADE BY: G.F.Z. CHK.D. BY: JLC DATE: 9-28-84

CONTRACT NUMBER: ME-84088-3 DRAWING NUMBER 15 OF 47

FED. ROAD DIV. NO.	STATE	FED. AID PROJ. NO.
1	ME	IG-395-8(82)176

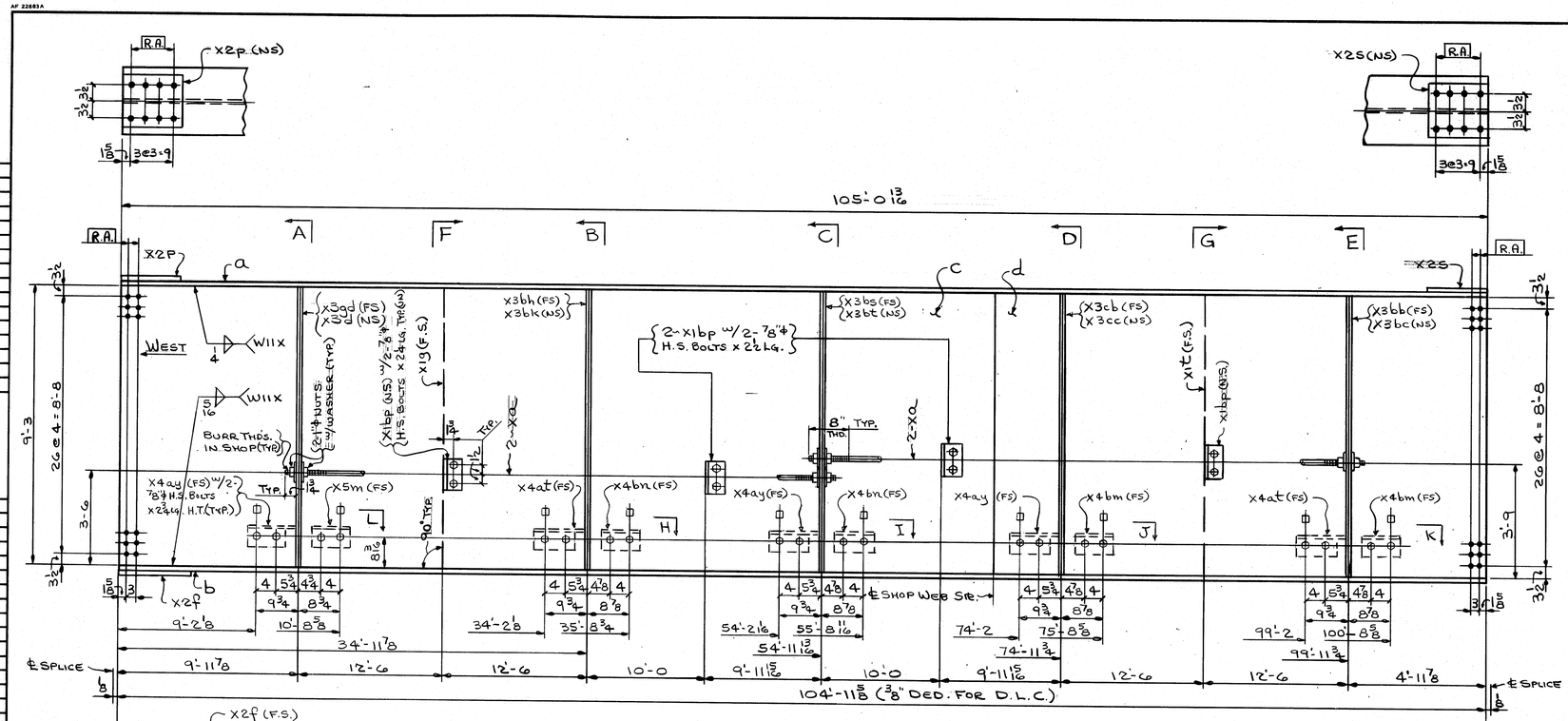

ONE - GIRDER - MK. G2M

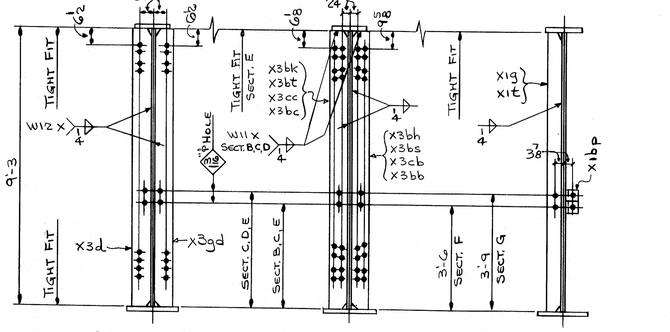

SECTION - A

SECTIONS - B, C, D & E

SECTIONS - F & G

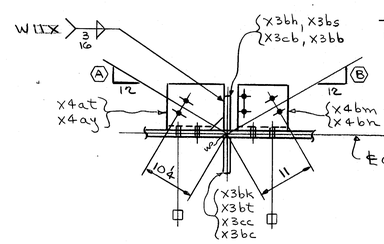

SECTION	(A)	(B)
H	6 3/4	8 3/8
I	8 3/8	8 3/8
J	8 3/8	6 3/4
K	6 3/4	6 3/4

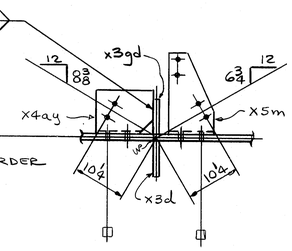

SECTION - L

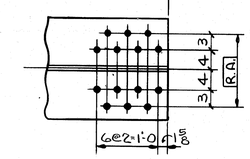

SHOP NOTE

HOLES: 13/16" ϕ (U.N.)
BOLTS: AS NOTED
PAINT: NONE

FOR CAMBER DIAGRAM, SEE DWG. WC1.
FOR GENERAL NOTES, SEE DWG. N1.

R95-193

CODE: 4000

BILL OF MATERIAL

NO.	MARK	DESCRIPTION	LENGTH	REMARKS	ITEM	TOTAL WEIGHT
ONE	G2M	GIRDER				42660
ONE	a	PL. 14 x 3/4	105 0 13/16			5,508.72
ONE	b	PL. 20 x 1 5/16	104 11 5/8			8,278.13
ONE	c	PL. 111 x 1 1/16	70 0 9/16			17,157.62
ONE	d	PL. 111 x 1 1/16	35 0 1/4			9,015.76
ONE	X2f	PL. 19 x 3/16	1 3 5/8	FILL		15.33
ONE	X2P	PL. 11 x 3/4	1 0 5/8	FILL		28.39
ONE	X2S	PL. 11 x 1/2	1 0 5/8	FILL		18.91
4	Xa	1"ϕ ROD	45 4	THD. BOTH ENDS	B1 5/3	45.46
16		1"ϕ STD. HEX NUTS			B1 14	5.22
16		WASH. FOR 1"ϕ NUTS			B1 12	
6	X1bP	L 5 x 3 x 1/2	0 6			
ONE	X19	BAR 5 x 1/2	9 3			7.08
	X1t	BAR 5 x 1/2				7.08
	X3gd	BAR 7 x 1/2				
	X3d					
	X3bb					
	X3bc					
	X3bh					
	X3bk					
	X3bs					
	X3bt					
	X3cb					
ONE	X3cc	BAR 7 x 1/2	9 3			11.8
4		7/8"ϕ H.S. BOLTS	0 2 1/4		B1 5	
4		7/8"ϕ H.S. BOLTS	0 2 1/2		B1 6	
28		WASH. FOR 7/8"ϕ H.S. BOLTS			B1 11	
20		7/8"ϕ H.S. BOLTS	0 2 3/4		B1 7	
2	X4at	PL MC 18 x 45.8	0 11 1/2			1,178
3	X4ay		0 11 1/2			1,767
2	X4bm		0 10			1,178
2	X4bn		0 10			1,178
ONE	X5m	PL MC 18 x 45.8	0 8 3/4			1,340

NO.	REVISION	DATE

HIGH STEEL STRUCTURES, INC.
1905 Old Philadelphia Pike
Lancaster, Pennsylvania 17603
Phone 717/299-5211
A Subsidiary of High Industries, Inc

GIRDER G2M
I-395 BRIDGE OVER PENOBSCOT RIVER
I-395 BRIDGE STA. 164+60.00
PENOBSCOT COUNTY
STATE OF MAINE
DEPARTMENT OF TRANSPORTATION

STATE CONTRACT OR REF. NO. 6 CONTRACTOR GIANBRO CORP.
IN CHARGE: HINKLE MADE BY: G.F.Z. CHK.D. BY: JLC DATE: 9-28-84
CONTRACT NUMBER: ME-84088-3 DRAWING NUMBER: 16 OF 47

AF 22683A

FED. ROAD DIV. NO.	STATE	FED. AID PROJ. NO.
1	ME	IIG-395-8(82)176

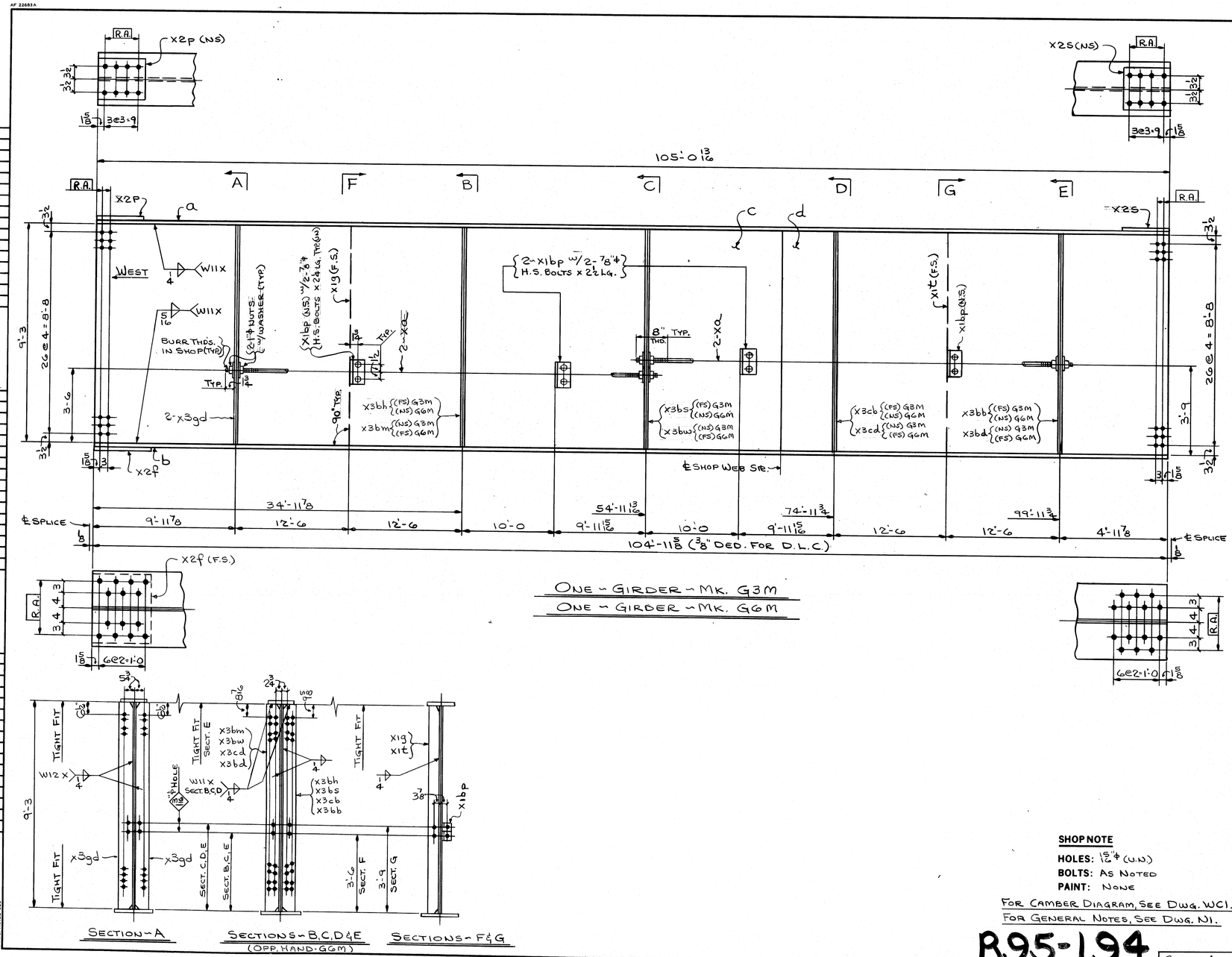

ONE - GIRDER - MK. G3M

ONE - GIRDER - MK. G6M

BILL OF MATERIAL

NO.	MARK	DESCRIPTION	LENGTH		REMARKS	ITEM	TOTAL WEIGHT
ONE	G3M	GIRDER					42,240
ONE	G6M	GIRDER					42,240
2	a	PL. 14 x ¾	105	0 13/16			[illegible]
2	b	PL. 20 x 1 5/16	104	11⅝			[illegible]
2	c	PL. 111 x 1 1/16	70	0 7/16			[illegible]
2	d	PL. 111 x 1 1/16	35	0¼			[illegible]
2	X2f	PL. 19 x 3/16	1	3⅜	FILL		15.25
2	X2p	PL. 11 x ¾	1	0⅛	FILL		28.42
2	X2s	PL. 11 x ½	1	0⅛	FILL		[illegible]
8	Xa	1"φ ROD	4.5	4	THD. BOTH ENDS	B1 5/3	[illegible]
32		1"φ STD. HEX NUTS				B1 14/81	[illegible]
32		WASH. FOR 1"φ NUTS				B1 12/81	
12	X1bp	L5 x 3 x ¼	0	6			[illegible]
2	X1g	BAR 5 x ½	9	3			[illegible]
2	X1t	BAR 5 x ½	9	3			[illegible]
							[illegible]
4	X3gd	BAR 7 x ½	9	3			[illegible]
2	X3bb						[illegible]
	X3bd						[illegible]
	X3bh						[illegible]
	X3bm						[illegible]
	X3bw						[illegible]
	X3bs						[illegible]
	X3cb						[illegible]
2	X3cd	BAR 7 x ½	9	3			[illegible]
8		⅞"φ H.S. BOLTS	0	2¼		B1 5/6	[illegible]
8		⅞"φ H.S. BOLTS	0	2½			[illegible]
16		WASH. FOR ⅞"φ H.S. BOLTS				B1 11	

SHOP NOTE

HOLES: 15/16"φ (W.N.)

BOLTS: AS NOTED

PAINT: NONE

FOR CAMBER DIAGRAM, SEE DWG. W01.

FOR GENERAL NOTES, SEE DWG. N1.

R95-194

CODE = 4000

NO.	REVISION	DATE

HIGH STEEL STRUCTURES, INC.
1905 Old Philadelphia Pike
Lancaster, Pennsylvania 17603
Phone 717/299-5211
A Subsidiary of High Industries, Inc

GIRDERS G3M & G6M

I-395 BRIDGE OVER PENOBSCOT RIVER

I-395 BRIDGE STA. 164+60.00

PENOBSCOT COUNTY

STATE OF MAINE

DEPARTMENT OF TRANSPORTATION

STATE CONTRACT OR REF. NO. 6 CONTRACTOR CIANBRO CORP.

IN CHARGE: HINKLE MADE BY: G.F.Z. CHK.D. BY: JLC DATE: 9-28-84

CONTRACT NUMBER: ME-84088-3 DRAWING NUMBER: 17 OF 47

FED. ROAD DIV. NO.	STATE	FED. AID PROJ. NO.
1	ME	IG-395-8(82)176

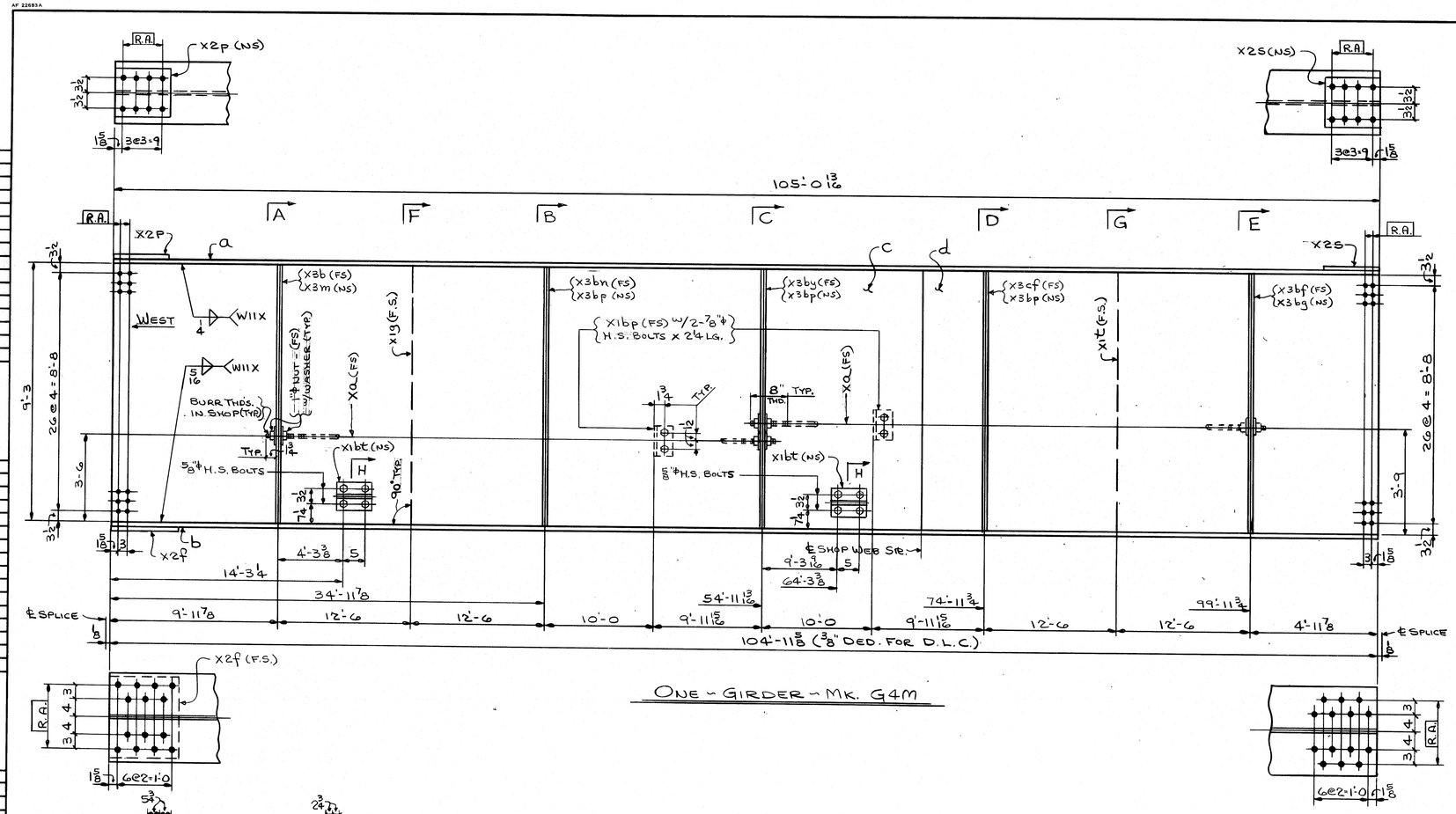

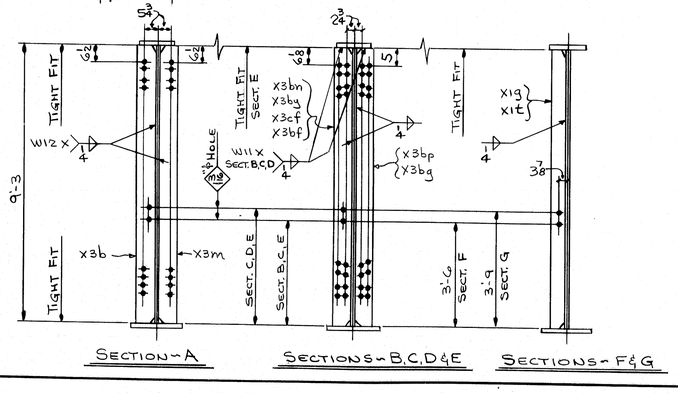

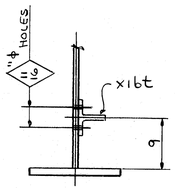

SHOP NOTE

HOLES: 15/16"ϕ (U.N.)
BOLTS: AS NOTED
PAINT: NONE

FOR CAMBER DIAGRAM, SEE DWG. WC1.
FOR GENERAL NOTES, SEE DWG. N1.

R95-195

CODE : 4000

BILL OF MATERIAL

NO.	MARK	DESCRIPTION	LENGTH		REMARKS	ITEM	TOTAL WEIGHT
ONE	G4M	GIRDER					41,990
ONE	a	PL. 14 x ¾	105	0 13/16			
ONE	b	PL. 20 x 1 5/16	104	11 5/8			
ONE	c	PL. 111 x 1/16	70	0 1/16			
ONE	d	PL. 111 x 1/16	35	0 1/4			
ONE	X2f	PL. 19 x 3/16	1	3 3/8	FILL		
ONE	X2p	PL. 11 x ¾	1	0 3/8	FILL		
ONE	X2s	PL. 11 x ½	1	0 3/8	FILL		
2	Xa	1"ϕ ROD	45	4	THD. BOTH ENDS	B1 5/3	
8		1"ϕ STD. HEX NUTS				B1 14/81	
8		WASH. FOR 1"ϕ NUTS				B1 12/81	
2	X1bp	L5 x 3 x ¼	0	6			
ONE	X1g	BAR 5 x ½	9	3			
	X1t	BAR 5 x ½					
	X3b	BAR 7 x ½					
	X3m						
	X3bg						
	X3bf						
ONE	X3bn						
3	X3bp						
ONE	X3by						
ONE	X3cf	BAR 7 x ½	9	3			
2	X1bt	WT 6 x 13	0	8			
4		7/8"ϕ H.S. BOLTS	0	2¼		B1 5	
4		WASH. FOR 7/8"ϕ H.S. BOLTS				B1 11	
8		5/8"ϕ H.S. BOLTS	0	2¼		B1 3	
8		WASH. FOR 5/8"ϕ H.S. BOLTS				B1 10	

NO.	REVISION	DATE

HIGH STEEL STRUCTURES, INC.
1905 Old Philadelphia Pike
Lancaster, Pennsylvania 17603
Phone 717/299-5211
A Subsidiary of High Industries, Inc

GIRDER G4M
I-395 BRIDGE OVER PENOBSCOT RIVER
I-395 BRIDGE STA. 164+60.00
PENOBSCOT COUNTY
STATE OF MAINE
DEPARTMENT OF TRANSPORTATION

STATE CONTRACT OR REF. NO. 6 CONTRACTOR CIANBRO CORP.
IN CHARGE: HINKLE MADE BY: G.F.Z. CHK.D. BY: JLC DATE: 9-28-84
CONTRACT NUMBER: ME-84088-3 DRAWING NUMBER: 18 OF 47

FED. ROAD DIV. NO.	STATE	FED. AID PROJ. NO.
1	ME	IG 395-8(82)176

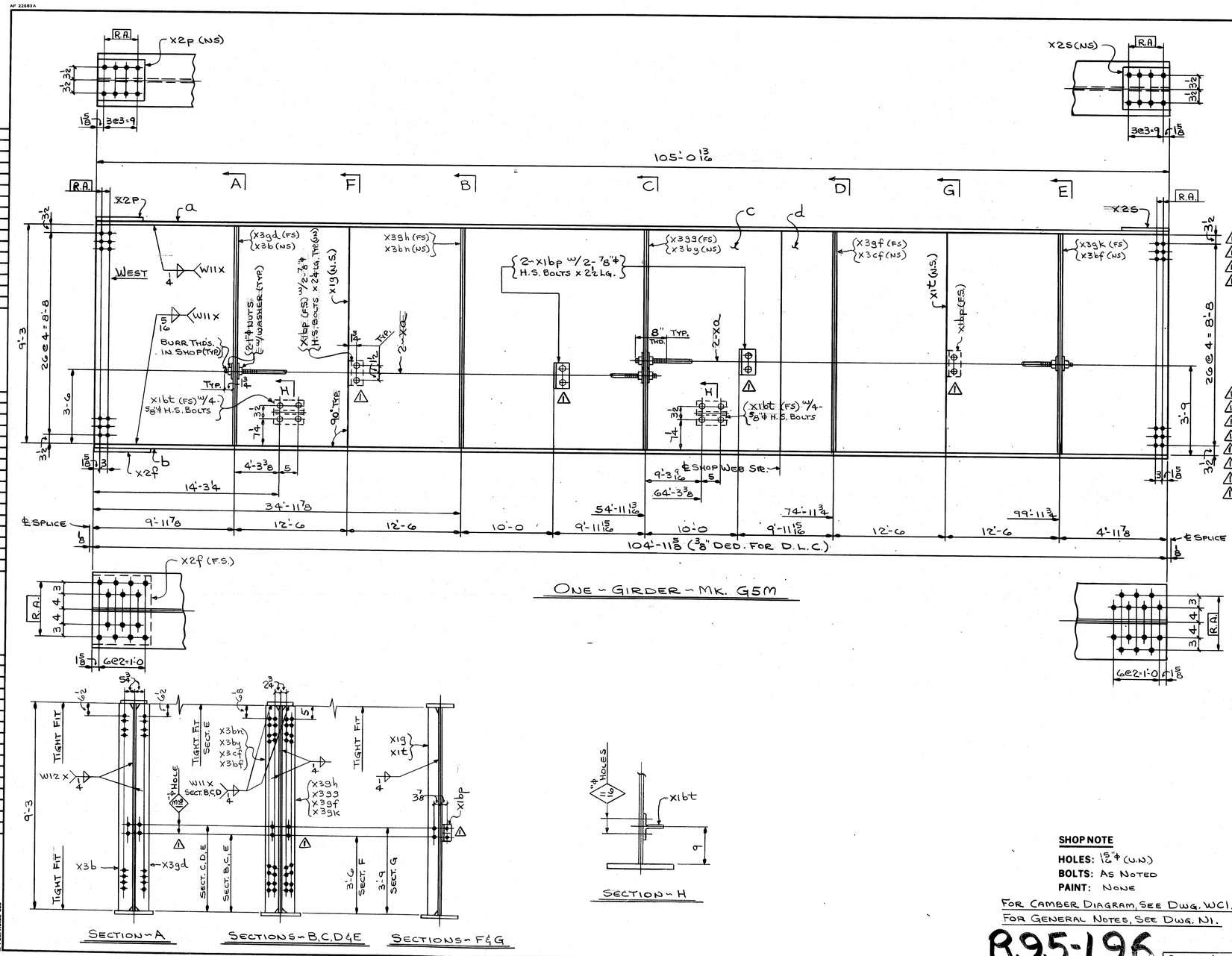

BILL OF MATERIAL

NO.	MARK	DESCRIPTION	LENGTH		REMARKS	ITEM	TOTAL WEIGHT
ONE	G5M	GIRDER					42,260
ONE	a	PL. 14 x ¾	105	0 13/16			5,072
ONE	b	PL. 20 x 1 5/16	104	11⅝			[illegible]
ONE	c	PL. 111 x 1 1/16	70	0 9/16			[illegible]
ONE	d	PL. 111 x 1/16	35	0¼			[illegible]
2	X1bt	WT 6 x 13	0	8			[illegible]
ONE	X2f	PL. 19 x 3/16	1	3⅛	FILL		[illegible]
ONE	X2P	PL. 11 x ¾	1	0⅛	FILL		[illegible]
ONE	X2S	PL. 11 x ½	1	0⅛	FILL		[illegible]
4	Xa	1"ϕ ROD	45	4	THD. BOTH ENDS	BI 5/3	4 pcs.
16		1"ϕ STD. HEX NUTS				BI 14	[illegible]
16		WASH. FOR 1"ϕ NUTS				BI 12	[illegible]
6	X1bP	L 5 x 3 x ¼	0	6			[illegible]
ONE	X1g	BAR 5 x ½	9	3			[illegible]
ONE	X1t	BAR 5 x ½					[illegible]
	X3b	BAR 7 x ½					[illegible]
	X3bf						[illegible]
	X3bn						[illegible]
	X3by						[illegible]
	X3cf						[illegible]
	X3gd						[illegible]
	X3gh						[illegible]
	X3gg						[illegible]
	X3gf						[illegible]
ONE	X3gk	BAR 7 x ½	9	3			[illegible]
4		⅞"ϕ H.S. BOLTS	0	2¼		BI 5/	
4		⅞"ϕ H.S. BOLTS	0	2½		BI 6/	
8		WASH. FOR ⅞"ϕ H.S. BOLTS				BI 11/	
8		⅝"ϕ H.S. BOLTS	0	2¼		BI 3/	
8		WASH. FOR ⅝"ϕ BOLTS				BI 10/	

SHOP NOTE

HOLES: 15/16"ϕ (U.N.)

BOLTS: AS NOTED

PAINT: NONE

FOR CAMBER DIAGRAM, SEE DWG. WC1.

FOR GENERAL NOTES, SEE DWG. N1.

R95-196

CODE = 4000

NO.	REVISION	DATE
1	CONTRACT RVISION CONTROL # 14	9-11-84

HIGH STEEL STRUCTURES, INC.
1905 Old Philadelphia Pike
Lancaster, Pennsylvania 17603
Phone 717/299-5211
A Subsidiary of High Industries, Inc.

GIRDER G5M
I-395 BRIDGE OVER PENOBSCOT RIVER
I-395 BRIDGE STA. 164+60.00
PENOBSCOT COUNTY
STATE OF MAINE
DEPARTMENT OF TRANSPORTATION

STATE CONTRACT OR REF. NO. 6 CONTRACTOR CIANBRO CORP.

IN CHARGE: HINKLE MADE BY: G.F.Z. CHK.D. BY: JLC DATE: 9-28-84

CONTRACT NUMBER: ME-84088-3 DRAWING NUMBER: 19 OF 47

FED. ROAD DIV. NO.	STATE	FED. AID PROJ. NO.
1	ME	IG395-8(82)176

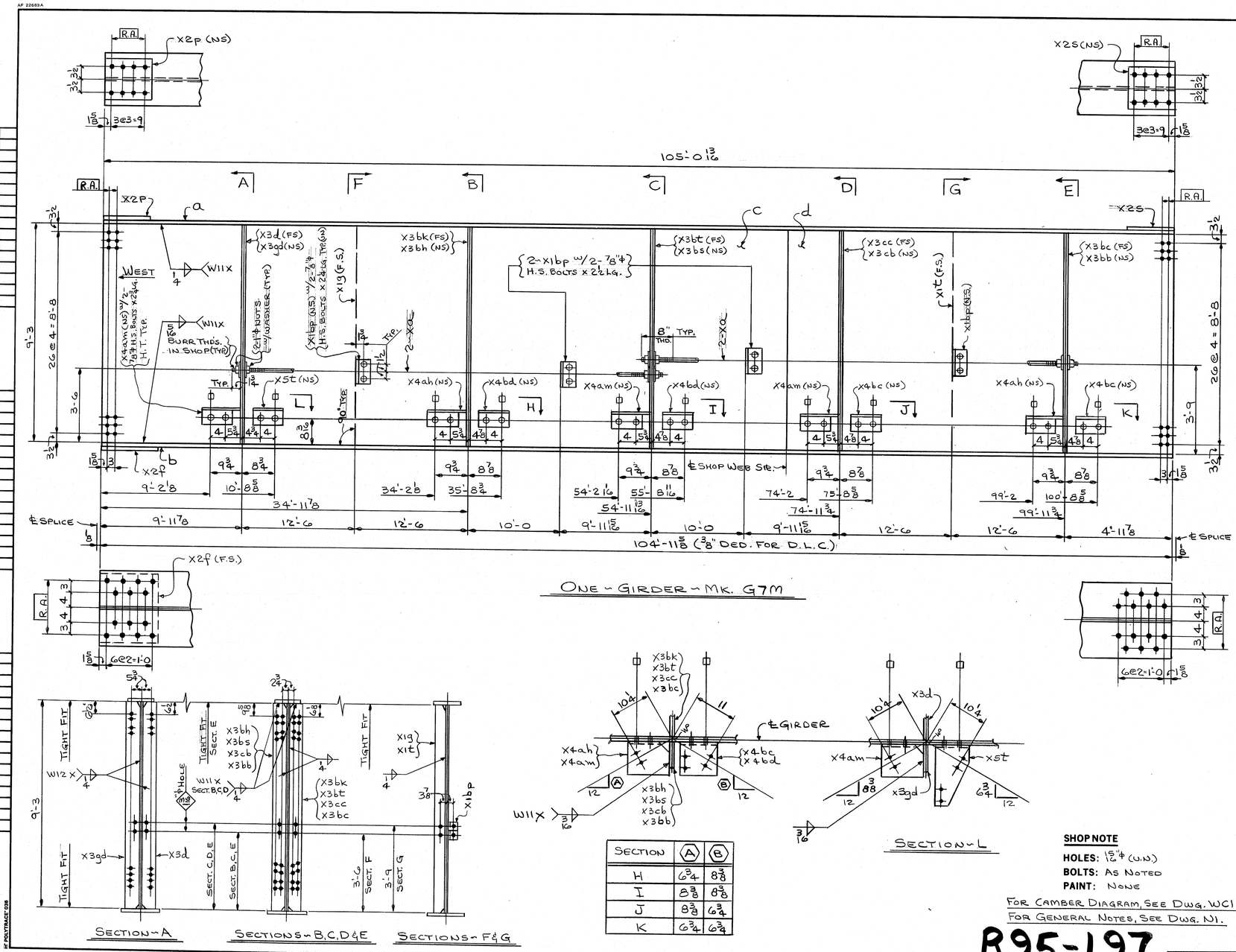

BILL OF MATERIAL

NO.	MARK	DESCRIPTION	LENGTH		REMARKS	ITEM	TOTAL WEIGHT
ONE	G7M	GIRDER					47660
ONE	a	PL. 14 x 3/4	105	0 13/16			
ONE	b	PL. 20 x 1 5/16	104	11 5/8			
ONE	c	PL. 111 x 11/16	70	0 9/16			
ONE	d	PL. 111 x 11/16	35	0 1/4			
ONE	x2f	PL. 19 x 3/16	1	3 1/8	FILL		
ONE	x2p	PL. 11 x 3/4	1	0 1/8	FILL		
ONE	x2s	PL. 11 x 1/2	1	0 1/8	FILL		
4	xa	1"ϕ ROD	4.5	4	THD. BOTH ENDS	5/3	
16		1"ϕ STD. HEX NUTS				B1/14	
16		WASH. FOR 1"ϕ NUTS				B1/12	
6	x1bp	L5 x 3 x 1/4	0	6			
ONE	x1g	BAR 5 x 1/2	9	3			
	x1t	BAR 5 x 1/2					
	x3gd	BAR 7 x 1/2					
	x3d						
	x3bb						
	x3bc						
	x3bh						
	x3bk						
	x3bs						
	x3bt						
	x3cb						
ONE	x3cc	BAR 7 x 1/2	9	3			
4		7/8"ϕ H.S. BOLTS	0	2 1/4		B1/5	
4		7/8"ϕ H.S. BOLTS	0	2 1/2		B1/6	
28		WASH. FOR 7/8"ϕ H.S. BOLTS				B1/11	
20		7/8"ϕ H.S. BOLTS	0	2 3/4		B1/7	
2	x4ah	PL. MC18 x 45.8	0	11 1/2			
3	x4am		0	11 1/2			
2	x4bc		0	10			
2	x4bd	PL. MC18 x 45.8	0	10			
ONE	x5t	PL. MC18 x 45.8	0	8 3/4			

SECTION	Ⓐ	Ⓑ
H	6 3/4	8 3/8
I	8 3/8	8 3/8
J	8 3/8	6 3/4
K	6 3/4	6 3/4

SHOP NOTE

HOLES: 15/16"ϕ (U.N.)
BOLTS: AS NOTED
PAINT: NONE

FOR CAMBER DIAGRAM, SEE DWG. WC1.
FOR GENERAL NOTES, SEE DWG. N1.

R95-197

CODE = 4000

NO.	REVISION	DATE

HIGH STEEL STRUCTURES, INC.
1905 Old Philadelphia Pike, Lancaster, Pennsylvania 17603, Phone 717/299-5211
A Subsidiary of High Industries, Inc.

GIRDER G7M
I-395 BRIDGE OVER PENOBSCOT RIVER
I-395 BRIDGE STA. 164+60.00
PENOBSCOT COUNTY
STATE OF MAINE
DEPARTMENT OF TRANSPORTATION

STATE CONTRACT OR REF. NO.: 6 CONTRACTOR: CIANBRO CORP.
IN CHARGE: HINKLE MADE BY: G.F.Z. CHK.D. BY: JLC DATE: 9-28-84
CONTRACT NUMBER: ME-84088-3 DRAWING NUMBER: 20 OF 47

AF 22683A

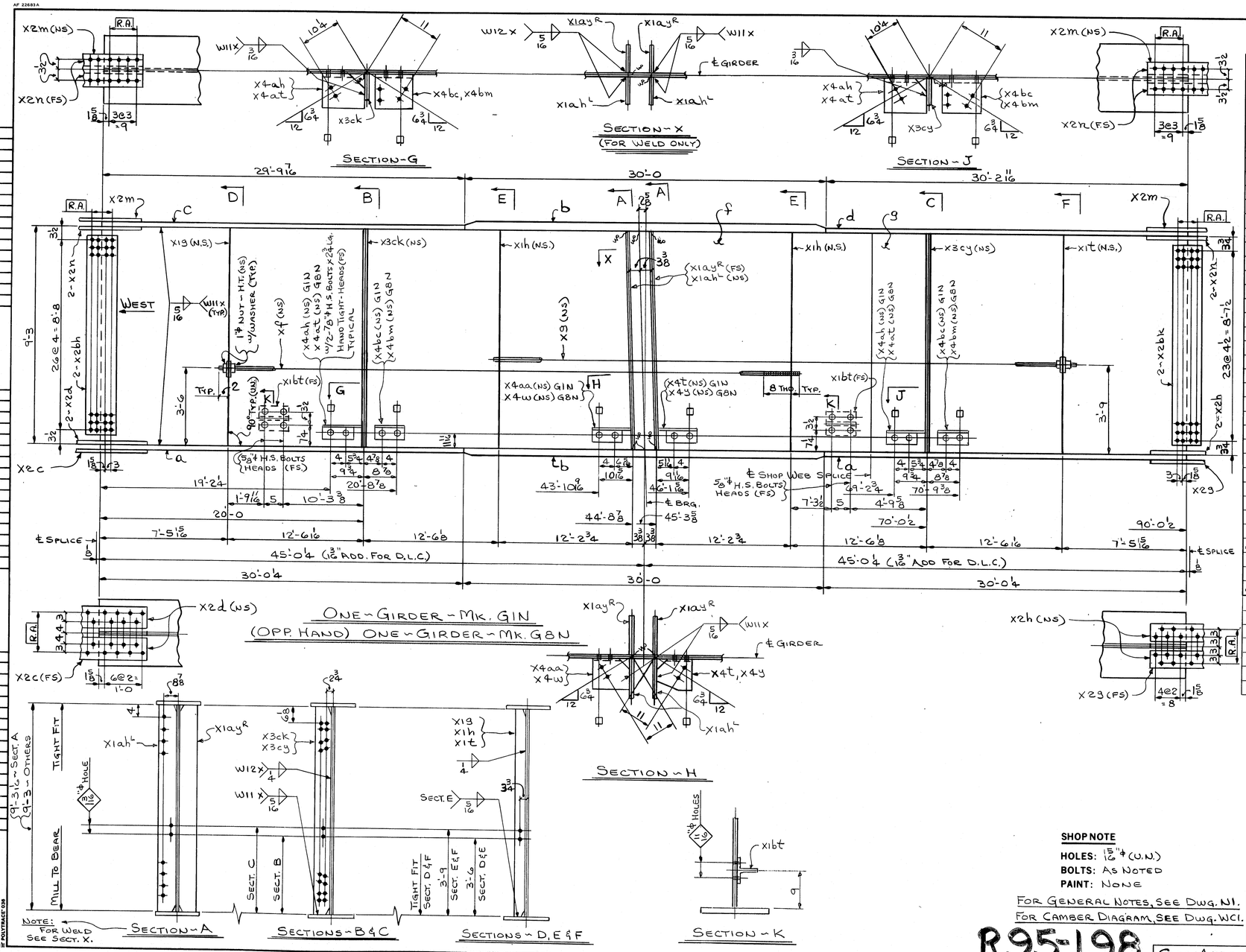

FED. ROAD DIV. NO.	STATE	FED. AID PROJ. NO.
1	ME	EIG-395-8(82)174

BILL OF MATERIAL

NO.	MARK	DESCRIPTION	LENGTH		REMARKS	ITEM	TOTAL WEIGHT
ONE	G1N	GIRDER					48945
ONE	G8N	GIRDER			OPP. HAND		48945
4	a	PL. 24 x 1 1/4	30	0 1/4			
4	b	PL. 24 x 2	30	0			
2	c	PL. 24 x 1 1/4	29	9 7/16			
2	d	PL. 24 x 1 1/4	30	2 11/16			
2	f	PL. 111 x 11/16	65	0			
2	g	PL. 111 x 11/16	25	0 1/2			
2	X9	1"ϕ ROD	50	0 1/2	THD. BOTH ENDS	5/10	
2	X19	1"ϕ ROD	50	2 1/4	THD. BOTH ENDS	5/11	
4	X1h	BAR 5 x 1/2	9	3			
2	X19	BAR 5 x 1/2	9	3			
2	X1t	BAR 5 x 1/2	9	3			
2	X2c	PL. 19 x 11/16	2	6 1/2			
4	X2d	BAR 8 x 7/8	2	6 1/2			
2	X29	PL. 15 x 9/16	1	10 1/2			
4	X2h	BAR 6 x 3/4	1	10 1/2			
4	X2m	PL. 11 x 1/2	2	0 1/2			
8	X2n	BAR 4 x 3/4	2	0 1/2			
4	X2bh	PL. 107 x 1/2	1	0 1/2			
4	X2bk	PL. 106 1/2 x 1/2	1	0 1/2			
8		1"ϕ STD. HEX. NUTS				B1/14	
8		WASH. FOR 1"ϕ RODS				B1/12	
24		WASH. FOR 7/8"ϕ H.S. BOLTS				B1/11	
24		7/8"ϕ H.S. BOLTS	0	2 3/4		B1/7	
16		5/8"ϕ H.S. BOLTS	0	2 1/4		B1/3	
16		WASH. FOR 5/8"ϕ H.S. BOLTS				B1/10	
4	X1ayR	PL. 10 x 1"	9	3 1/16	X1ayR FOR G1N; X1ayL FOR G8N		
4	X1ahL	PL. 10 x 1"	9	3 1/16	X1ahL FOR G1N; X1ahR FOR G8N		
2	X3ck	BAR 7 x 1/2	9	3			
2	X3cy	BAR 7 x 1/2	9	3			
4	X1bt	WT 6 x 13	0	8			
ONE	X4w	PL. MC 18 x 45.8	0	11 1/2	G8N		
↕	X4t	↕	0	11 1/2	G1N		
↕	X4y	↕	0	11 1/2	G8N		
ONE	X4aa	↕	0	11 1/2	G1N		
2	X4ah	↕	0	11 1/2	G1N		
↕	X4at	↕	0	11 1/2	G8N		
↕	X4bc	↕	0	10	G1N		
2	X4bm	PL. MC 18 x 45.8	0	10	G8N		

NO.	REVISION	DATE

HIGH STEEL STRUCTURES, INC.
1905 Old Philadelphia Pike
Lancaster, Pennsylvania 17603
Phone 717/299-5211
A Subsidiary of High Industries, Inc

GIRDERS G1N & G8N
I-395 BRIDGE OVER PENOBSCOT RIVER
I-395 BRIDGE STA. 164 + 60.00
PENOBSCOT COUNTY
STATE OF MAINE
DEPARTMENT OF TRANSPORTATION

STATE CONTRACT OR REF. NO. 6 CONTRACTOR GIANBRO CORP.
IN CHARGE: HINKLE MADE BY: G.F.X. CHK.D. BY: JLC DATE: 10-1-84
CONTRACT NUMBER: ME-84088-3 DRAWING NUMBER: 21 OF 47

SHOP NOTE
HOLES: 15/16"ϕ (U.N.)
BOLTS: AS NOTED
PAINT: NONE

FOR GENERAL NOTES, SEE DWG. N1.
FOR CAMBER DIAGRAM, SEE DWG. W1.

R95-198

CODE: 4000

AF 22683A

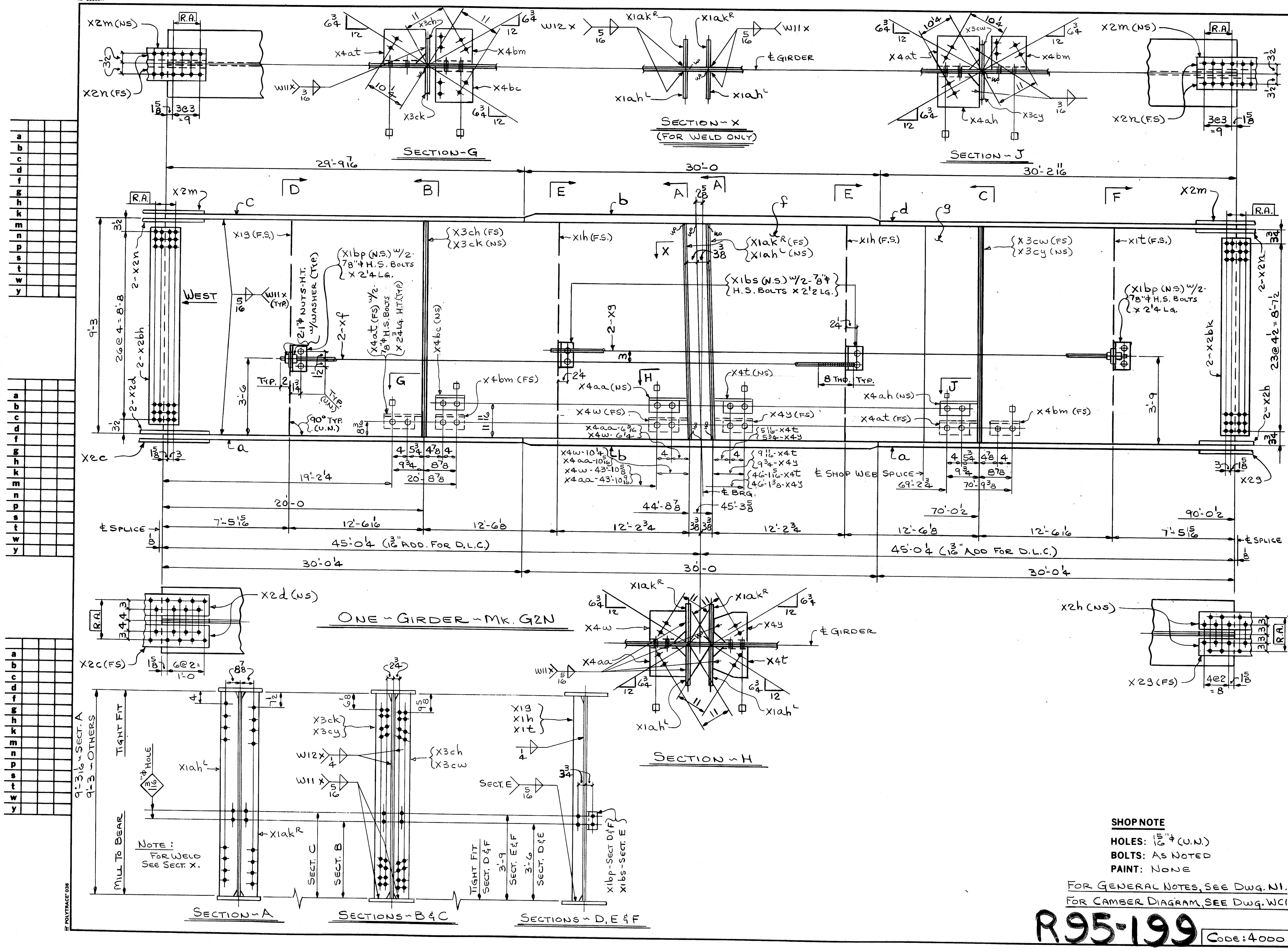

FED. ROAD DIV. NO.	STATE	FED. AID PROJ. NO.
1	ME	I-IG-395-8(82)176

BILL OF MATERIAL

NO.	MARK	DESCRIPTION	LENGTH		REMARKS	ITEM	TOTAL WEIGHT
ONE	G2N	GIRDER					49,620
2	a	PL. 24 x 1 1/4	30	0 1/4			
2	b	PL. 24 x 2	30	0			
ONE	c	PL. 24 x 1 1/4	29	9 7/16			
↑	d	PL. 24 x 1 1/4	30	2 11/16			
↓	f	PL. 111 x 11/16	65	0			
ONE	g	PL. 111 x 11/16	25	0 1/2			
2	Xf	1"φ ROD	50	0 1/2	THD. BOTH ENDS	5/10	
2	Xg	1"φ ROD	50	2 1/4	THD. BOTH ENDS	5/11	
2	X1h	BAR 5 x 1/2	9	3			
ONE	X1g	BAR 5 x 1/2	9	3			
ONE	X1t	BAR 5 x 1/2	9	3			
ONE	X2c	PL. 19 x 11/16	2	6 1/2			
2	X2d	BAR 8 x 7/8	2	6 1/2			
ONE	X2g	PL. 15 x 9/16	1	10 1/2			
2	X2h	BAR 6 x 3/4	1	10 1/2			
2	X2m	PL. 11 x 1/2	2	0 1/2			
4	X2n	BAR 4 x 3/4	2	0 1/2			
2	X2bh	PL. 107 x 1/2	1	0 1/2			
2	X2bk	PL. 106 1/2 x 1/2	1	0 1/2			
8		1"φ STD. HEX. NUTS				B1/14	
8		WASH. FOR 1"φ RODS				B1/12	
28		WASH. FOR 7/8"φ H.S. BOLTS				B1/11	
4		7/8"φ H.S. BOLTS	0	2 1/4		B1/5	
4		7/8"φ H.S. BOLTS	0	2 1/2		B1/6	
20		7/8"φ H.S. BOLTS	0	2 3/4		B1/7	
2	X1ak[R]	PL. 10 x 1"	9	3 1/16			
2	X1ah[L]	PL. 10 x 1"	9	3 1/16			
2	X1bs	L 5 x 3 1/2 x 1/2	0	6			
2	X1bp	L 5 x 3 x 1/4	0	6			
ONE	X3ch	BAR 7 x 1/2	9	3			
↑	X3ck	↑	↑	↑			
↓	X3cw	↓	↓	↓			
ONE	X3cy	BAR 7 x 1/2	9	3			
ONE	X4w	PC. MC18 x 45.8	0	11 1/2			
↑	X4t	↑	0	11 1/2			
	X4y		0	11 1/2			
	X4aa		0	11 1/2			
↓	X4ah		0	11 1/2			
ONE	X4bc		0	10			
2	X4at	↓	0	11 1/2			
2	X4bm	PC. MC18 x 45.8	0	10			

SHOP NOTE

HOLES: 15/16"φ (U.N.)
BOLTS: AS NOTED
PAINT: NONE

FOR GENERAL NOTES, SEE DWG. N1.
FOR CAMBER DIAGRAM, SEE DWG. WC1.

R95-199

CODE: 4000

NO.	REVISION	DATE

HIGH STEEL STRUCTURES, INC.
1905 Old Philadelphia Pike
Lancaster, Pennsylvania 17603
Phone 717/299-5211
A Subsidiary of High Industries, Inc

GIRDER G2N
I-395 BRIDGE OVER PENOBSCOT RIVER
I-395 BRIDGE STA. 164 + 60.00
PENOBSCOT COUNTY
STATE OF MAINE
DEPARTMENT OF TRANSPORTATION

STATE CONTRACT OR REF. NO. 6 CONTRACTOR GIANBRO CORP.
IN CHARGE: HINKLE MADE BY: G.F.Z. CHK'D. BY: JLC DATE: 10-1-84
CONTRACT NUMBER: ME-84088-3 DRAWING NUMBER: 22 OF 47

POLYTRACE 036

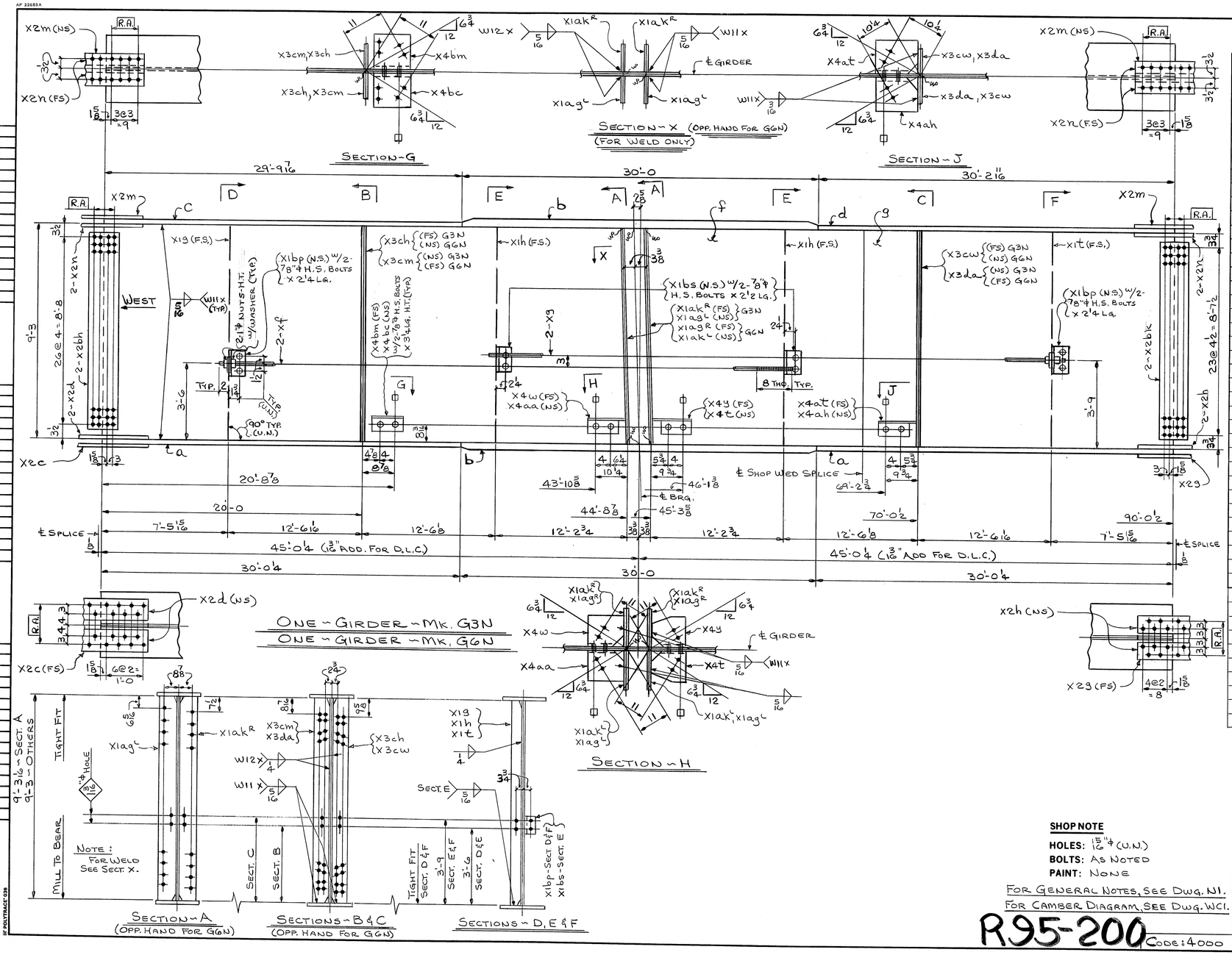

FED. ROAD DIV. NO.	STATE	FED. AID PROJ. NO.
1	ME	I-IG-395-8(82)176

BILL OF MATERIAL

NO.	MARK	DESCRIPTION	LENGTH		REMARKS	ITEM	TOTAL WEIGHT
ONE	G3N	GIRDER					49,525
ONE	G6N	GIRDER					49,525
4	a	PL. 24 x 1 1/4	30	0 1/4			
4	b	PL. 24 x 2	30	0			
2	c	PL. 24 x 1 1/4	29	9 7/16			
2	d	PL. 24 x 1 1/4	30	2 11/16			
2	f	PL. 111 x 11/16	65	0			
2	g	PL. 111 x 11/16	25	0 1/2			
4	xf	1" ϕ ROD	50	0 1/2	THD. BOTH ENDS	5/10	
4	xg	1" ϕ ROD	50	2 1/4	THD. BOTH ENDS	5/11	
4	x1h	BAR 5 x 1/2	9	3			
2	x1g	BAR 5 x 1/2	9	3			
2	x1t	BAR 5 x 1/2	9	3			
2	x2c	PL. 19 x 11/16	2	6 1/2			
4	x2d	BAR 8 x 7/8	2	6 1/2			
2	x2g	PL. 15 x 9/16	1	10 1/2			
4	x2h	BAR 6 x 3/4	1	10 1/2			
4	x2m	PL. 11 x 1/2	2	0 1/2			
8	x2n	BAR 4 x 3/4	2	0 1/2			
4	x2bh	PL. 107 x 1/2	1	0 1/2			
4	x2bk	PL. 106 1/2 x 1/2	1	0 1/2			
16		1" ϕ STD. HEX. NUTS				B1/14	
16		WASH. FOR 1" ϕ RODS				B1/12	
32		WASH. FOR 7/8" ϕ H.S. BOLTS				B1/11	
8		7/8" ϕ H.S. BOLTS	0	2 1/4		B1/5	
8		7/8" ϕ H.S. BOLTS	0	2 1/2		B1/6	
16		7/8" ϕ H.S. BOLTS	0	3 1/4		B1/8	
4	x1agL/R	PL. 10 x 1"	9	3 1/16	x1agL ~ G3N, x1agR ~ G6N		
4	x1akL/R	PL. 10 x 1"	9	3 1/16	x1akR ~ G3N, x1akL ~ G6N		
4	x1bs	L 5 x 3 1/2 x 1/2	0	6			
4	x1bp	L 5 x 3 x 1/4	0	6			
2	x3ch	BAR 7 x 1/2	9	3			
	x3cm	↕	↕	↕			
	x3cw						
	x3da	BAR 7 x 1/2	9	3			
	x4t	PL. MC18 x 45.8	0	11 1/2			
	x4w	↕	0	11 1/2			
	x4y		0	11 1/2			
	x4aa		0	11 1/2			
	x4ah		0	11 1/2			
	x4at		0	11 1/2			
	x4bc		0	10			
2	x4bm	PL. MC18 x 45.8	0	10			

NO.	REVISION	DATE

SHOP NOTE

HOLES: 15/16" ϕ (U.N.)
BOLTS: AS NOTED
PAINT: NONE

FOR GENERAL NOTES, SEE DWG. N1.
FOR CAMBER DIAGRAM, SEE DWG. W C1.

R95-200 CODE: 4000

HIGH STEEL STRUCTURES, INC.
1905 Old Philadelphia Pike
Lancaster, Pennsylvania 17603
Phone 717/299-5211
A Subsidiary of High Industries, Inc

GIRDERS G3N & G6N
I-395 BRIDGE OVER PENOBSCOT RIVER
I-395 BRIDGE STA. 164 + 60.00
PENOBSCOT COUNTY
STATE OF MAINE
DEPARTMENT OF TRANSPORTATION

STATE CONTRACT OR REF. NO. 6 CONTRACTOR GANBRO CORP.
IN CHARGE: HINKLE MADE BY: G.F.Z. CHK.D. BY: JLC DATE: 10-1-84
CONTRACT NUMBER: ME-84088-3 DRAWING NUMBER: 23 OF 47

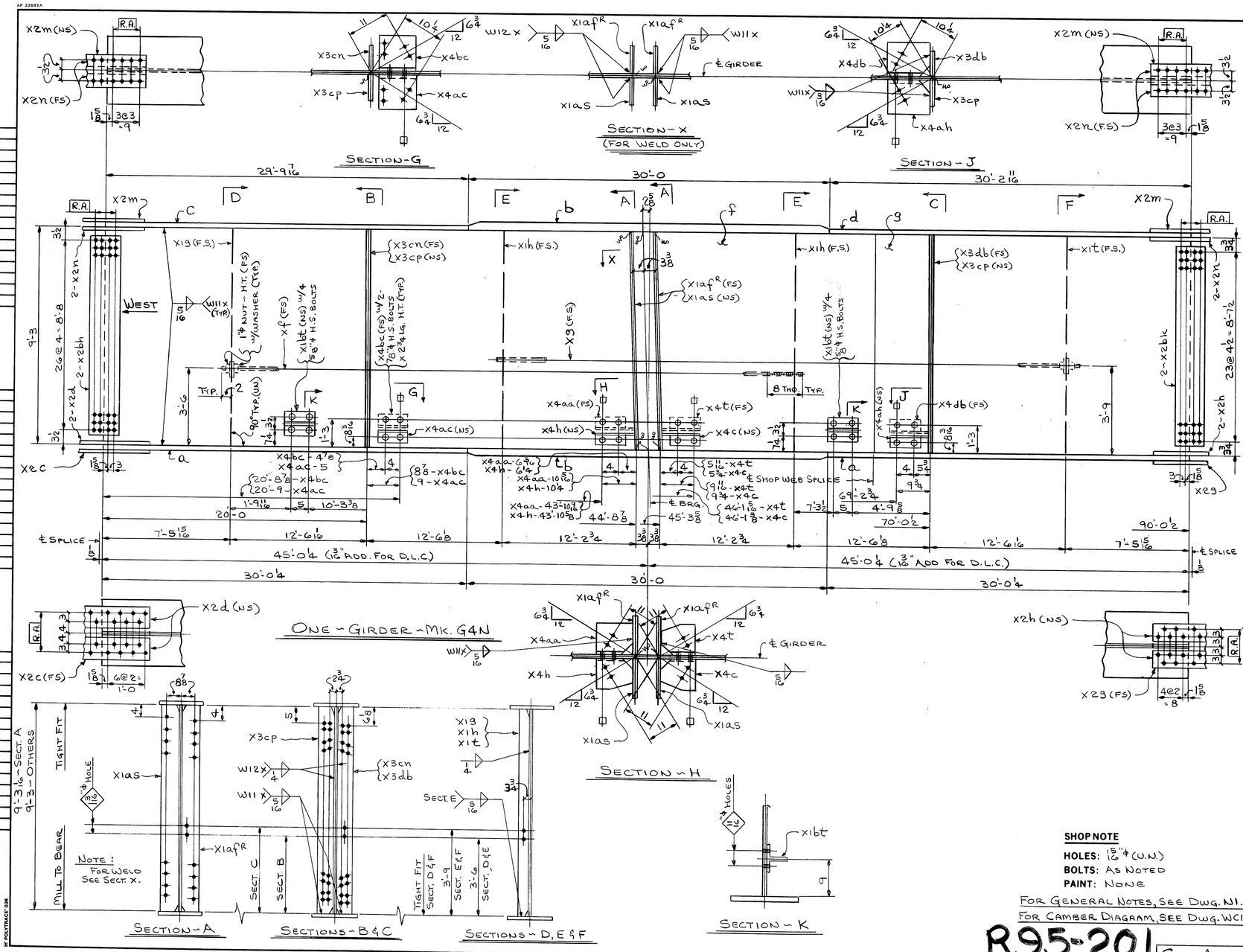

FED. ROAD DIV. NO.	STATE	FED. AID PROJ. NO.
1	ME	I-IG-395-8(82)176

BILL OF MATERIAL

NO.	MARK	DESCRIPTION	LENGTH		REMARKS	ITEM	TOTAL WEIGHT
ONE	G4N	GIRDER					49,255
2	a	PL. 24 x 1 1/4	30	0 1/4			
2	b	PL. 24 x 2	30	0			
ONE	c	PL. 24 x 1 1/4	29	9 7/16			
ONE	d	PL. 24 x 1 1/4	30	2 1/16			
ONE	f	PL. 111 x 1 1/16	65	0			
ONE	g	PL. 111 x 1 1/16	25	0 1/2			
ONE	xf	1"ϕ ROD	50	0 1/2	THD. BOTH ENDS	5/10	
ONE	xg	1"ϕ ROD	50	2 1/4	THD. BOTH ENDS	5/11	
2	x1h	BAR 5 x 1/2	9	3			
ONE	x1g	BAR 5 x 1/2	9	3			
ONE	x1t	BAR 5 x 1/2	9	3			
ONE	x2c	PL. 19 x 1 1/16	2	6 1/2			
2	x2d	BAR 8 x 7/8	2	6 1/2			
ONE	x2g	PL. 15 x 9/16	1	10 1/2			
2	x2h	BAR 6 x 3/4	1	10 1/2			
2	x2m	PL. 11 x 1/2	2	0 1/2			
4	x2n	BAR 4 x 3/4	2	0 1/2			
2	x2bh	PL. 107 x 1/2	1	0 1/2			
2	x2bk	PL. 106 1/2 x 1/2	1	0 1/2			
4		1"ϕ STD. HEX. NUTS				B1/14	
4		WASH. FOR 1"ϕ RODS				B1/12	
16		WASH. FOR 7/8"ϕ H.S. BOLTS				B1/11	
16		7/8"ϕ H.S. BOLTS	0	2 3/4		B1/7	
8		5/8"ϕ H.S. BOLTS	0	2 1/4		B1/3	
8		WASH. FOR 5/8"ϕ H.S. BOLTS				B1/10	
2	x1bt	WT 6 x 13	0	8			
2	x1afR	PL. 10 x 1"	9	3 1/16			
2	x1as	PL. 10 x 1"	9	3 1/16			
2	x3cp	BAR 7 x 1/2	9	3			
ONE	x3cn	BAR 7 x 1/2	9	3			
	x3db	BAR 7 x 1/2	9	3			
	x4c	PL. MC18 x 45.8	0	11 1/2			
	x4h		0	11 1/2			
	x4t		0	11 1/2			
	x4aa		0	11 1/2			
	x4ac		0	9 1/2			
ONE	x4bc		0	10			
ONE	x4ah	PL MC18 x 45.8	0	11 1/2			
ONE	x4db	PL MC18 x 45.8	0	11 1/2			

SHOP NOTE

HOLES: 15/16"ϕ (U.N.)
BOLTS: AS NOTED
PAINT: NONE

FOR GENERAL NOTES, SEE DWG. N1.
FOR CAMBER DIAGRAM, SEE DWG. WC1.

R95-201 CODE: 4000

NO.	REVISION	DATE

HIGH STEEL STRUCTURES, INC.
1905 Old Philadelphia Pike
Lancaster, Pennsylvania 17603
Phone 717/299-5211
A Subsidiary of High Industries, Inc

GIRDER G4N
I-395 BRIDGE OVER PENOBSCOT RIVER
I-395 BRIDGE STA. 164 + 60.00
PENOBSCOT COUNTY
STATE OF MAINE
DEPARTMENT OF TRANSPORTATION

STATE CONTRACT OR REF. NO. 6 CONTRACTOR GANBRO CORP.
IN CHARGE: HINKLE MADE BY: G.F.X. CHK.D. BY: JLC DATE: 10-1-84
CONTRACT NUMBER: ME-84088-3 DRAWING NUMBER: 24 OF 47

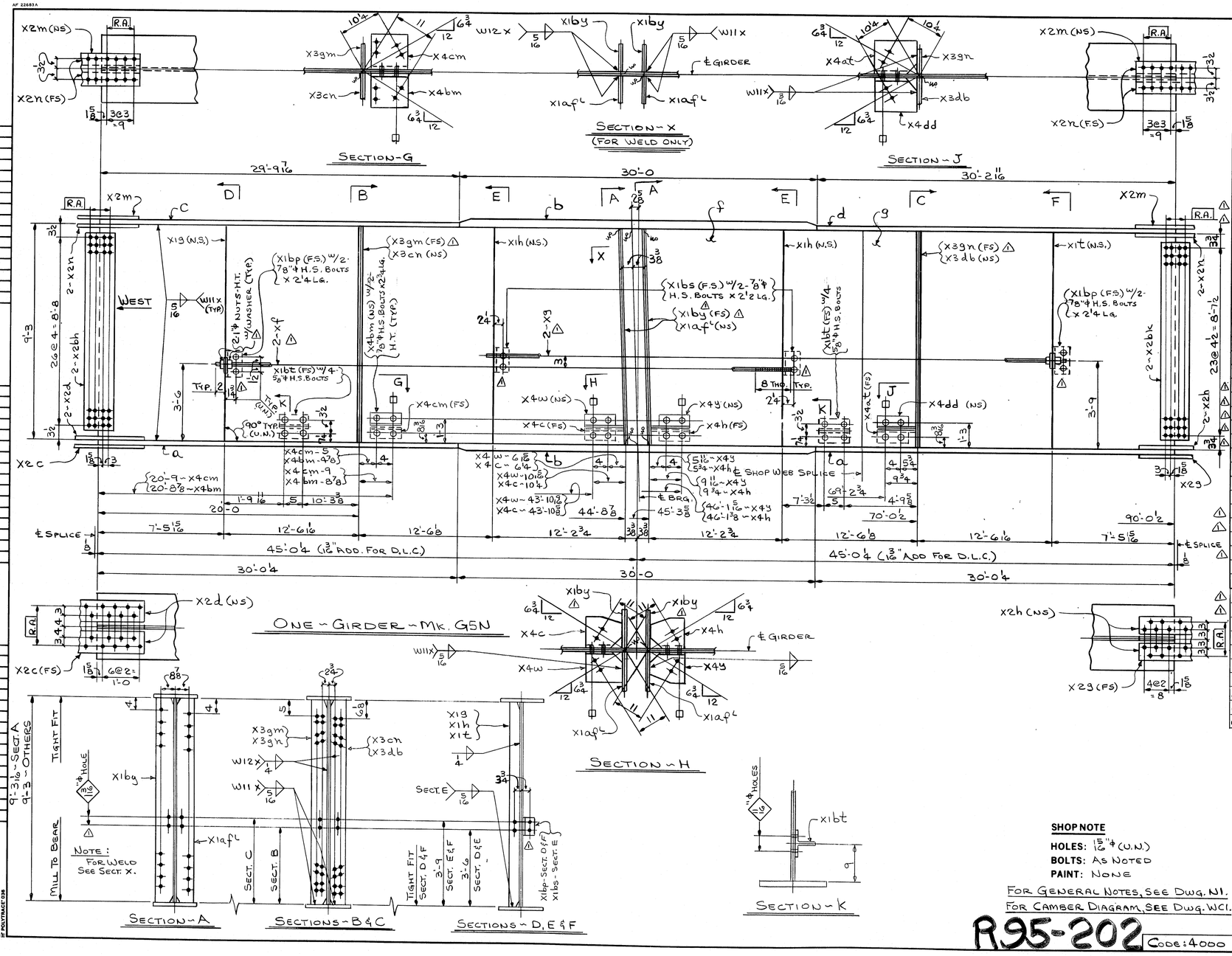

FED. ROAD DIV. NO.	STATE	FED. AID PROJ. NO.
1	ME	I-IG-395-8(82)174

BILL OF MATERIAL

NO.	MARK	DESCRIPTION	LENGTH		REMARKS	ITEM	Total WEIGHT
ONE	G5N	GIRDER					49,510
2	a	PL. 24 x 1¼	30	0¼			
2	b	PL. 24 x 2	30	0			
ONE	c	PL. 24 x 1¼	29	9 7/16			
↑	d	PL. 24 x 1¼	30	2 11/16			
↓	f	PL. 111 x 11/16	65	0			
ONE	g	PL. 111 x 11/16	25	0½			
2	x1f	1"φ ROD	50	0½	THD. BOTH ENDS	5/10	
2	x1g	1"φ ROD	50	2¼	THD. BOTH ENDS	5/11	
2	x1h	BAR 5 x ½	9	3			
ONE	x1i	BAR 5 x ½	9	3			
ONE	x1t	BAR 5 x ½	9	3			
ONE	x2c	PL. 19 x 11/16	2	6½			
2	x2d	BAR 8 x ⅞	2	6½			
ONE	x2g	PL. 15 x 9/16	1	10½			
2	x2h	BAR 6 x ¾	1	10½			
2	x2m	PL. 11 x ½	2	0½			
4	x2n	BAR 4 x ¾	2	0½			
2	x2bh	PL. 107 x ½	1	0½			
2	x2bk	PL. 106½ x ½	1	0½			
△ 8		1"φ STD. HEX. NUTS				61/14	
△ 8		WASH. FOR 1"φ RODS				61/12	
△ 24		WASH. FOR ⅞"φ H.S. BOLTS				61/11	
△ 4		⅞"φ H.S. BOLTS	0	2¼		61/5	
4		⅞"φ H.S. BOLTS	0	2½		61/6	
16		⅞"φ H.S. BOLTS	0	2¾		61/7	
8		⅝"φ H.S. BOLTS	0	2¼		61/3	
8		WASH. FOR ⅝"φ H.S. BOLTS				61/10	
2	x1bt	WT 6 x 13	0	8			
△ 2	x1bs	L 5 x 3½ x ½	0	6			
△ 2	x1bp	L 5 x 3 x ¼	0	6			
2	x1af	PL. 10 x 1"	9	3 1/16			
2	x1by	PL. 10 x 1"	9	3 1/16			
ONE	x3cn	BAR 7 x ½	9	3			
↑	x3db	↕	↕	↕			
	x3gm						
△	x3gn	BAR 7 x ½	9	3			
△	x4c	R. MC18 x 45.8	0	11½			
	x4h		0	11½			
	x4w		0	11½			
	x4y		0	11½			
↓	x4bm	↕	0	10			
ONE	x4cm		0	9½			
ONE	x4at	R. MC18 x 45.8	0	11½			
ONE	x4dd	R. MC18 x 45.8	0	11½			

NO.	REVISION	DATE
△	CONTRACT REVISION CONTROL # 14	9/21/84

HIGH STEEL STRUCTURES, INC.
1905 Old Philadelphia Pike
Lancaster, Pennsylvania 17603
Phone 717/299-5211
A Subsidiary of High Industries, Inc

GIRDER G5N
I-395 BRIDGE OVER PENOBSCOT RIVER
I-395 BRIDGE STA. 164 + 60.00
PENOBSCOT COUNTY
STATE OF MAINE
DEPARTMENT OF TRANSPORTATION

STATE CONTRACT OR REF. NO. 6 CONTRACTOR GANBRO CORP.
IN CHARGE: HINKLE MADE BY: G.F.Z. CHK.D. BY: JLC DATE: 10-1-84
CONTRACT NUMBER: ME-84088-3 DRAWING NUMBER: 25 OF 47

SHOP NOTE

HOLES: 15/16"φ (U.N.)
BOLTS: AS NOTED
PAINT: NONE

FOR GENERAL NOTES, SEE DWG. N1.
FOR CAMBER DIAGRAM, SEE DWG. W1.

R95-202

CODE: 4000

AF 22683A

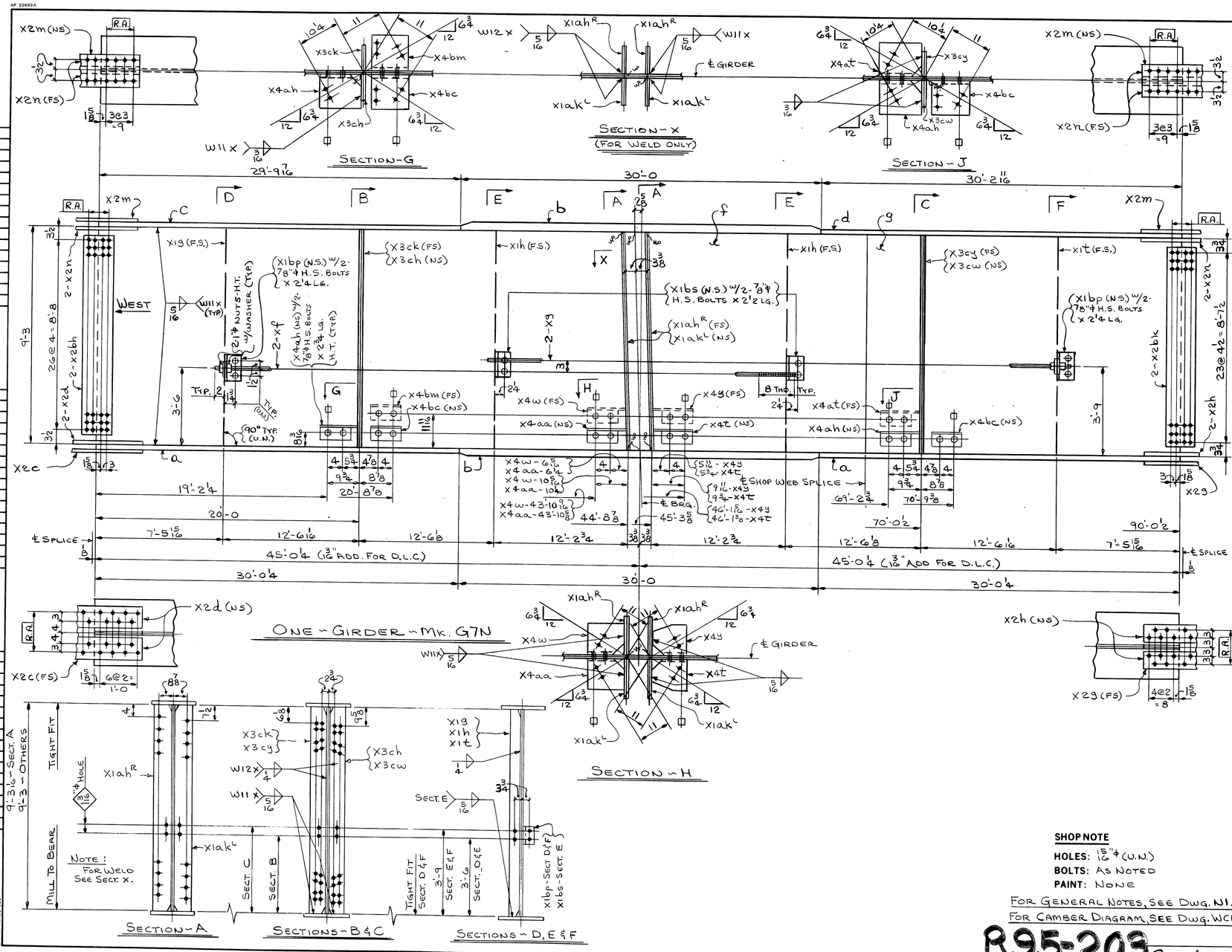

FED. ROAD DIV. NO.	STATE	FED. AID PROJ. NO.
1	ME	IIG-395-8(82)174

BILL OF MATERIAL

NO.	MARK	DESCRIPTION	LENGTH		REMARKS	ITEM	TOTAL WEIGHT
ONE	G7N	GIRDER					49,620
2	a	PL. 24 x 1¼	30	0¼			
2	b	PL. 24 x 2	30	0			
ONE	c	PL. 24 x 1¼	29	9 7/16			
↕	d	PL. 24 x 1¼	30	2 11/16			
↕	f	PL. 111 x 11/16	65	0			
ONE	g	PL. 111 x 11/16	25	0½			
2	Xf	1"ϕ ROD	50	0½	THD. BOTH ENDS	5/10	
2	Xg	1"ϕ ROD	50	2¼	THD. BOTH ENDS	5/11	
2	X1h	BAR 5 x ½	9	3			
ONE	X1g	BAR 5 x ½	9	3			
ONE	X1t	BAR 5 x ½	9	3			
ONE	X2c	PL. 19 x 11/16	2	6½			
2	X2d	BAR 8 x ⅞	2	6½			
ONE	X2g	PL. 15 x 9/16	1	10½			
2	X2h	BAR 6 x ¾	1	10½			
2	X2m	PL. 11 x ½	2	0½			
4	X2n	BAR 4 x ¾	2	0½			
2	X2bh	PL. 107 x ½	1	0½			
2	X2bk	PL. 106½ x ½	1	0½			
8		1"ϕ STD. HEX. NUTS				BI 14	
8		WASH. FOR 1"ϕ RODS				BI 12	
28		WASH. FOR ⅞"ϕ H.S. BOLTS				BI 11	
4		⅞"ϕ H.S. BOLTS	0	2¼		BI 5	
4		⅞"ϕ H.S. BOLTS	0	2½		BI 6	
20		⅞"ϕ H.S. BOLTS	0	2¾		BI 7	
2	X1ah^R	PL. 10 x 1"	9	3 1/16			
2	X1ak^L	PL. 10 x 1"	9	3 1/16			
2	X1bs	L 5 x 3½ x ½	0	6			
2	X1bp	L 5 x 3 x ¼	0	6			
ONE	X3ch	BAR 7 x ½	9	3			
↕	X3ck	↕	↕	↕			
↕	X3cw	↕	↕	↕			
ONE	X3cy	BAR 7 x ½	9	3			
ONE	X4t	PL. MC18 x 45.8	0	11½			
↕	X4w	↕	0	11½			
↕	X4y	↕	0	11½			
↕	X4aa	↕	0	11½			
↕	X4at	↕	0	11½			
ONE	X4bm	↕	0	10			
2	X4bc	↕	0	10			
2	X4ah	PL. MC18 x 45.8	0	11½			

SHOP NOTE

HOLES: 15/16"ϕ (U.N.)
BOLTS: AS NOTED
PAINT: NONE

FOR GENERAL NOTES, SEE DWG. N1.
FOR CAMBER DIAGRAM, SEE DWG. W C1.

R95-203 CODE: 4000

NO.	REVISION	DATE

HIGH STEEL STRUCTURES, INC.
1905 Old Philadelphia Pike
Lancaster, Pennsylvania 17603
Phone 717/299-5211
A Subsidiary of High Industries, Inc

GIRDER G7N
I-395 BRIDGE OVER PENOBSCOT RIVER
I-395 BRIDGE STA. 164 + 60.00
PENOBSCOT COUNTY
STATE OF MAINE
DEPARTMENT OF TRANSPORTATION

STATE CONTRACT OR REF. NO. 6 CONTRACTOR GIANBRO CORP.
IN CHARGE: HINKLE MADE BY: G.F.Z. CHK.D. BY: JLC DATE: 10-1-84
CONTRACT NUMBER: ME-84088-3 DRAWING NUMBER: 26 OF 47

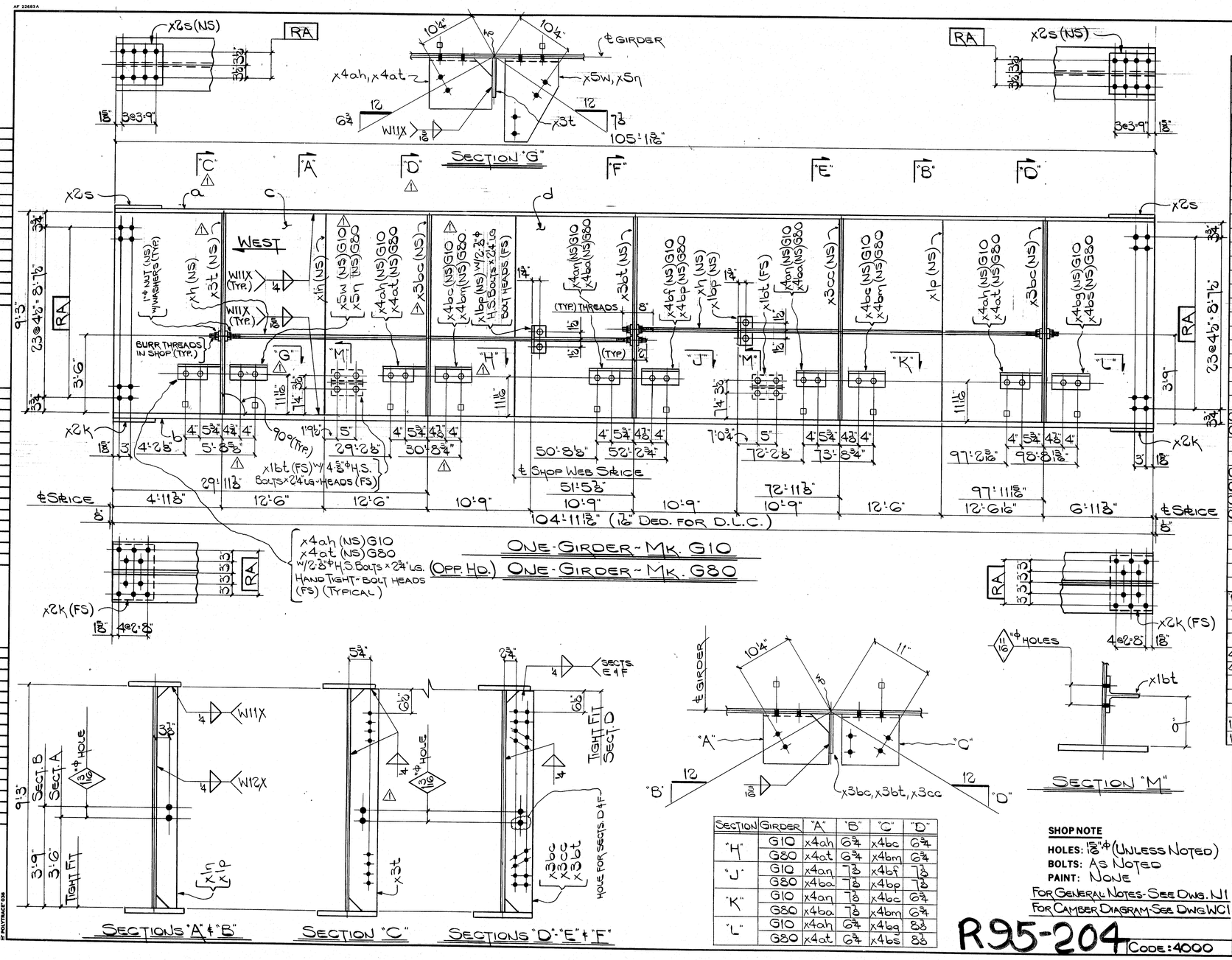

SECTION	GIRDER	"A"	"B"	"C"	"D"
"H"	G10	x4ah	6 3/4	x4bc	6 3/4
	G80	x4at	6 3/4	x4bm	6 3/4
"J"	G10	x4an	7 7/8	x4bf	7 7/8
	G80	x4ba	7 7/8	x4bp	7 7/8
"K"	G10	x4an	7 7/8	x4bc	6 3/4
	G80	x4ba	7 7/8	x4bm	6 3/4
"L"	G10	x4ah	6 3/4	x4bg	8 3/8
	G80	x4at	6 3/4	x4bs	8 3/8

SHOP NOTE

HOLES: 15/16"Φ (UNLESS NOTED)
BOLTS: AS NOTED
PAINT: NONE

FOR GENERAL NOTES - SEE DWG. N1
FOR CAMBER DIAGRAM - SEE DWG. W1

R95-204 CODE: 4000

FED. ROAD DIV. NO.	STATE	FED. AID PROJ. NO.
1	ME	HIG 3958(82) 176

BILL OF MATERIAL

NO.	MARK	DESCRIPTION	LENGTH		REMARKS	ITEM	TOTAL WEIGHT
ONE-GIRDER-MK. G10							38,220
ONE-GIRDER-MK. G80 (OPP. HD.)							38,220
2	a	PL. 14 x 3/4	105	1 3/8			3756
2	b	PL. 16 x 1	104	11 7/8			5711
2	c	PL. 111 x 11/16	35	6 11/16			917
2	d	PL. 111 x 11/16	69	6 1/2			1810
4	x2k	FILL PL. 15 x 4	0	11 1/2			33.74
4	x2s	FILL PL. 11 x 1/2	1	0 3/8			37.76
2	x1n	BAR 5 x 1/2	9	3			75.63
2	x1p	BAR 5 x 1/2	9	3			75.62
4	x1bp	L 5 x 3 x 1/4	0	6			26.60
4	x1bt	WT G x 13	0	8			17.34
2	x3t	BAR 7 x 1/2	9	3			102.08
4	x3bc	BAR 7 x 1/2	9	3			204.16
2	x3bt	BAR 7 x 1/2	9	3			102.08
2	x3cc	BAR 7 x 1/2	9	3			102.08
3	x4ah	R. MC18 x 45.8	0	11 1/2	G10		1566.7
3	x4at		0	11 1/2	G80		
2	x4bc		0	10	G10		1304.4
2	x4bm		0	10	G80		
One	x5w		0	8 3/4	G10		438.10
One	x5n		0	8 3/4	G80		
2	x4an		0	11 1/2	G10		1566.7
2	x4ba		0	11 1/2	G80		
One	x4bf		0	10	G10		522.17
One	x4bp		0	10	G80		
One	x4bg		0	10	G10		
One	x4bs	R. MC18 x 45.8	0	10	G80		
4	xh	1"Φ ROD	46.10		THREAD BOTH ENDS	51/516	
16		7/8"Φ H.S. BOLT	0	2 3/4		51/5	
16		WASHERS FOR 7/8"Φ H.S. BOLTS				51/10	
8		7/8"Φ H.S. BOLT	0	2 3/4		51/5	
40		7/8"Φ H.S. BOLT	0	2 3/4		51/7	
48		WASHERS FOR 7/8"Φ H.S. BOLTS				51/11	
16		1"Φ STD. HEX. NUTS				51/14	
16		WASHERS FOR 1"Φ RODS				51/12	

NO.	REVISION	DATE
1	const. joint moved control #15	11-19-84

HIGH STEEL STRUCTURES, INC.
1905 Old Philadelphia Pike
Lancaster, Pennsylvania 17603
Phone 717/299-5211
A Subsidiary of High Industries, Inc.

GIRDER - G10 & G80
I-395 BRIDGE OVER PENOBSCOT RIVER
I-395 BRIDGE STA. 164 + 60.00
PENOBSCOT COUNTY
STATE OF MAINE
DEPARTMENT OF TRANSPORTATION

STATE CONTRACT OR REF. NO. 6 CONTRACTOR CIANBRO CORP.
IN CHARGE: HINKLE MADE BY: CS CHK'D BY: JLC DATE: 9-27-84
CONTRACT NUMBER: ME-84088-3 DRAWING NUMBER: 27 OF 47

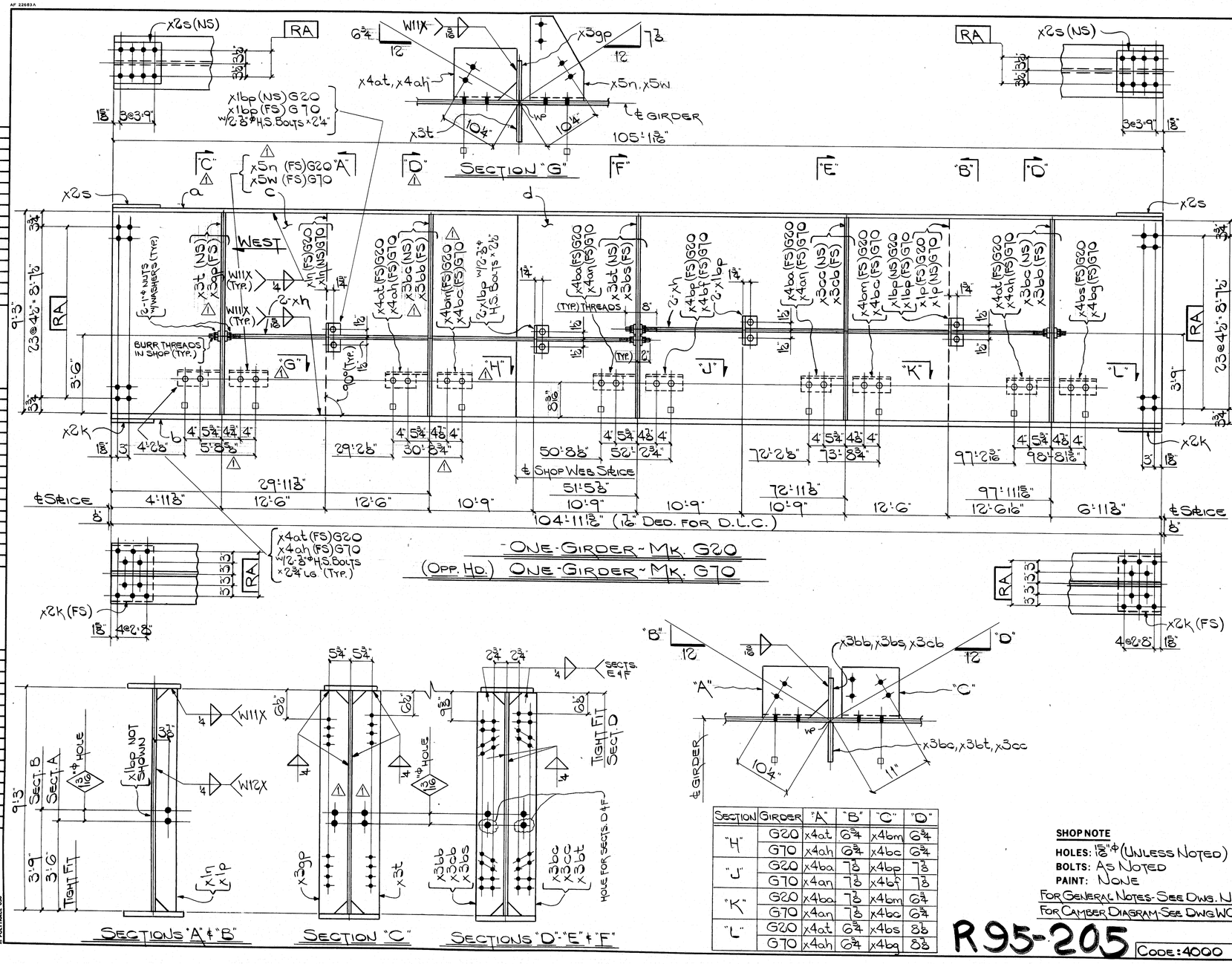

SECTION	GIRDER	"A"	"B"	"C"	"D"
"H"	G20	x4at	6 3/4	x4bm	6 3/4
	G70	x4ah	6 3/4	x4bc	6 3/4
"J"	G20	x4ba	7 1/8	x4bp	7 1/8
	G70	x4an	7 1/8	x4bt	7 1/8
"K"	G20	x4bo	7 1/8	x4bm	6 3/4
	G70	x4an	7 1/8	x4bc	6 3/4
"L"	G20	x4at	6 3/4	x4bs	8 1/8
	G70	x4ah	6 3/4	x4bg	8 1/8

SHOP NOTE

HOLES: 15/16"ϕ (UNLESS NOTED)
BOLTS: AS NOTED
PAINT: NONE
FOR GENERAL NOTES - SEE DWG. N1
FOR CAMBER DIAGRAM SEE DWG WC1

R95-205

CODE: 4000

FED. ROAD DIV. NO.	STATE	FED. AID PROJ. NO.
1	ME	HG3958(82)176

BILL OF MATERIAL

NO.	MARK	DESCRIPTION	LENGTH		REMARKS	ITEM	TOTAL WEIGHT
ONE	GIRDER-MK. G20						39,020
ONE	GIRDER-MK. G70 (OPP. HD.)						39,020
2	a	PL. 14 × 3/4	105	1 1/8			
2	b	PL. 16 × 1	104	11 1/8			
2	c	PL. 111 × 1 1/16	35	6 1/16			
2	d	PL. 111 × 1 1/16	69	6 1/2			
4	x2k	FILL PL. 15 × 4	0	11 1/8			
4	x2s	FILL PL. 11 × 1/2	1	0 1/8			
2	x1n	BAR 5 × 1/2	9	3			
2	x1p	BAR 5 × 1/2	9	3			
12	x1bp	L 5 × 3 × 4	0	6			
4	x3bb	BAR 7 × 1/2	9	3			
4	x3bo						
2	x3gp						
2	x3t						
2	x3bs						
2	x3bt						
2	x3cb						
2	x3co	BAR 7 × 1/2	9	3			
8	xh	1"ϕ ROD	46	10	THREAD BOTH ENDS		5/516
3	x4at	R. MC18 × 45.8	0	11 1/2	G20		
3	x4ah		0	11 1/2	G70		
2	x4bm		0	10	G20		
2	x4bc		0	10	G70		
ONE	x5n		0	8 3/4	G20		
ONE	x5w		0	8 3/4	G70		
2	x4ba		0	11 1/2	G20		
2	x4an		0	11 1/2	G70		
ONE	x4bp		0	10	G20		
ONE	x4bt		0	10	G70		
ONE	x4bs		0	10	G20		
ONE	x4bg	R. MC18 × 45.8	0	10	G70		
8		3/4"ϕ H.S. BOLT	0	2 1/4		B1	5
8		3/4"ϕ H.S. BOLT	0	2 1/2		B1	6
40		3/4"ϕ H.S. BOLT	0	2 3/4		B1	7
56		WASHERS FOR 3/4"ϕ H.S. BOLTS				B1	11
32		1"ϕ STD. HEX. NUTS				B1	14
32		WASHERS FOR 1"ϕ RODS				B1	16

NO.	REVISION	DATE
1	const. joint moved control #15	11-19-84

HIGH STEEL STRUCTURES, INC.
1905 Old Philadelphia Pike
Lancaster, Pennsylvania 17603
Phone 717/299-5211
A Subsidiary of High Industries, Inc

GIRDER ~ G20 & G70
I-395 BRIDGE OVER PENOBSCOT RIVER
I-395 BRIDGE STA. 164 + 60.00
PENOBSCOT COUNTY
STATE OF MAINE
DEPARTMENT OF TRANSPORTATION

STATE CONTRACT OR REF. NO. 6 CONTRACTOR CIANBRO CORP.
IN CHARGE: HINKLE MADE BY: CS CHK.D. BY: JLC DATE: 9-27-84
CONTRACT NUMBER: ME-84088-3 DRAWING NUMBER: 28 OF 47

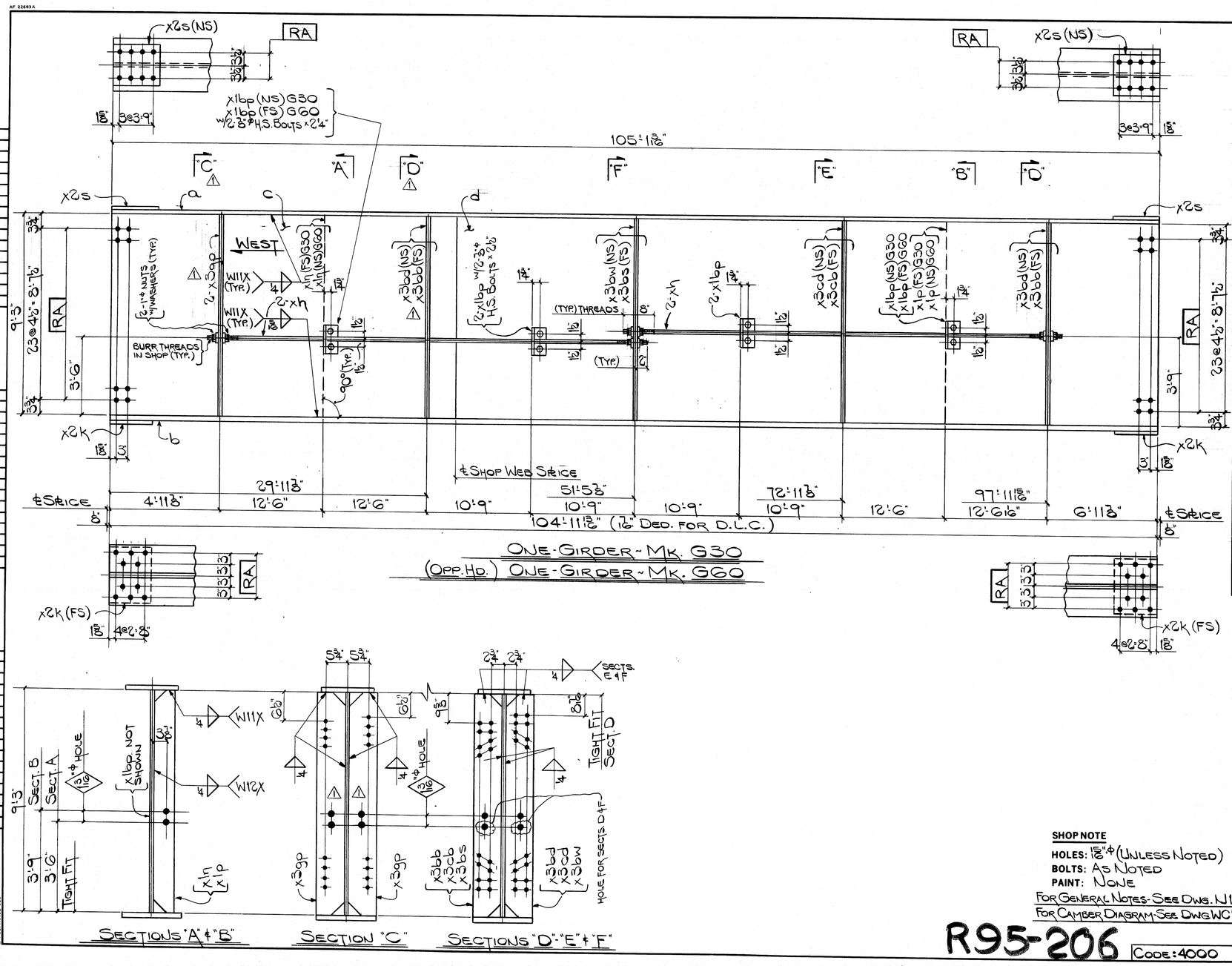

FED. ROAD DIV. NO.	STATE	FED. AID PROJ. NO.
1	ME	HIG395-8(82)176

BILL OF MATERIAL

NO.	MARK	DESCRIPTION	LENGTH		REMARKS	ITEM	TOTAL WEIGHT
ONE-GIRDER-MK. G30							38,595
ONE-GIRDER-MK. G60 (OPP. HD.)							38,595
2	a	PL. 14 x 3/4	105	1 3/8			
2	b	PL. 16 x 1	104	11 7/8			
2	c	PL. 111 x 1/16	35	6 1/16			
2	d	PL. 111 x 1/16	69	6 1/2			
4	x2k	FILL PL. 15 x 1/4	0	11/8			
4	x2s	FILL PL. 11 x 1/2	1	0 1/8			
2	x1n	BAR 5 x 1/2	9	3			
2	x1p	BAR 5 x 1/2	9	3			
12	x1bp	L 5 x 3 x 1/4	0	6			
4	x3bb	BAR 7 x 1/2	9	3			
4	x3bd	BAR 7 x 1/2	9	3			
4	x3gp	BAR 7 x 1/2	9	3			
2	x3bs	BAR 7 x 1/2	9	3			
2	x3bw	↕	↕	↕			
2	x3cb	↕	↕	↕			
2	x3cd	BAR 7 x 1/2	9	3			
8	xh	1"ϕ ROD	46	10	THREAD BOTH ENDS	5/516	
8		3/4"ϕ H.S. BOLT	0	2 1/4		61/5	
8		3/4"ϕ H.S. BOLT	0	2 1/2		61/6	
16		WASHERS FOR 3/4"ϕ H.S. BOLTS				61/11	
32		1"ϕ STD. HEX. NUTS				61/14	
32		WASHERS FOR 1"ϕ RODS				61/12	

SHOP NOTE

HOLES: 13/16"ϕ (UNLESS NOTED)
BOLTS: AS NOTED
PAINT: NONE

FOR GENERAL NOTES - SEE DWG. N1
FOR CAMBER DIAGRAM - SEE DWG. WC1

R95-206

CODE: 4000

NO.	REVISION	DATE
1	Const. joint moved control #15	11-19-84

HIGH STEEL STRUCTURES, INC.
1905 Old Philadelphia Pike
Lancaster, Pennsylvania 17603
Phone 717/299-5211
A Subsidiary of High Industries, Inc.

GIRDER - G30 & G60
I-395 BRIDGE OVER PENOBSCOT RIVER
I-395 BRIDGE STA. 164 + 60.00
PENOBSCOT COUNTY
STATE OF MAINE
DEPARTMENT OF TRANSPORTATION

STATE CONTRACT OR REF. NO. 6 CONTRACTOR CIANBRO CORP.

IN CHARGE: HINKLE MADE BY: CS CHK'D BY: JLC DATE: 9-27-84

CONTRACT NUMBER ME-84038-3 DRAWING NUMBER 29 OF 47

FED. ROAD DIV. NO.	STATE	FED. AID PROJ. NO.
1	ME	IIG3958(82)176

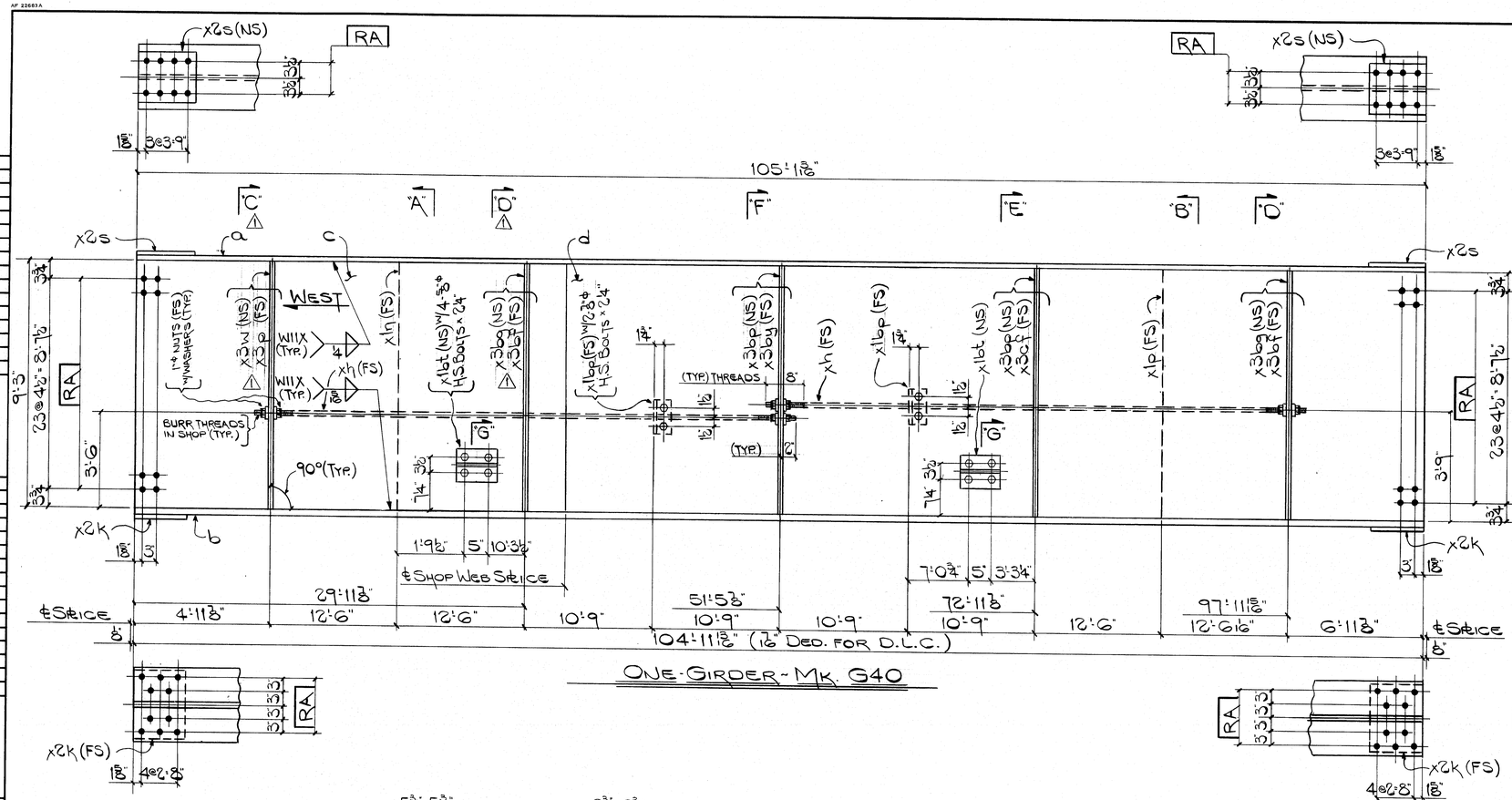

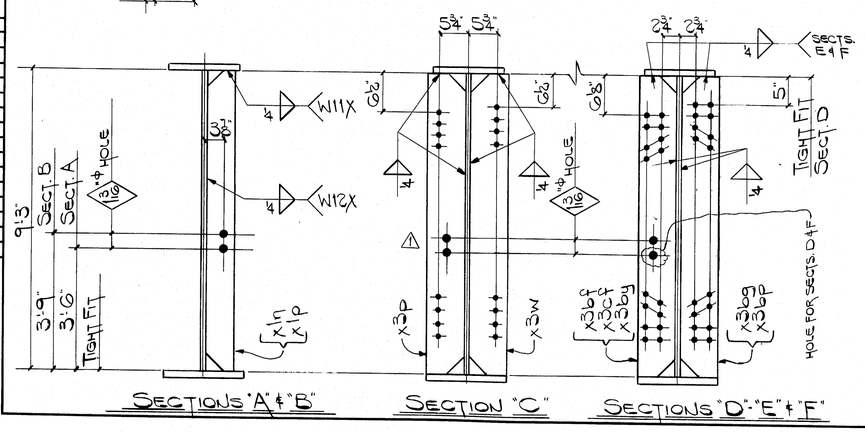

SECTIONS "A" & "B" SECTION "C" SECTIONS "D" "E" & "F"

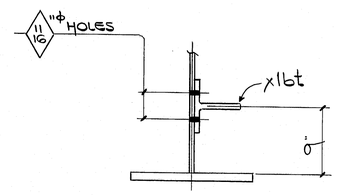

SECTION "G"

SHOP NOTE

HOLES: 15/16"Φ (UNLESS NOTED)
BOLTS: AS NOTED
PAINT: NONE

FOR GENERAL NOTES - SEE DWG. N1
FOR CAMBER DIAGRAM - SEE DWG. W1

R95-207 CODE: 4000

BILL OF MATERIAL

NO.	MARK	DESCRIPTION	LENGTH		REMARKS	ITEM	TOTAL WEIGHT
ONE-GIRDER~MK. G40							38,225
ONE	a	PL. 14 x 3/4	105	1 13/16			
ONE	b	PL. 16 x 1	104	11 13/16			
ONE	c	PL. 111 x 11/16	35	6 11/16			
ONE	d	PL. 111 x 11/16	69	6 1/2			
2	x2k	FILL PL. 15 x 4	0	11 1/8			
2	x2s	FILL PL. 11 x 2	1	0 1/8			
ONE	x1n	BAR 5 x 1/2	9	3			
ONE	x1p	BAR 5 x 1/2	9	3			
2	x1bp	L 5 x 3 x 4	0	6			
2	x3bg	BAR 7 x 1/2	9	3			
2	x3bf	↕	↕	↕			
ONE	x3w						
ONE	x3p						
2	x3bp						
ONE	x3by						
ONE	x3cf	BAR 7 x 1/2	9	3			
2	x1h	1"Φ ROD	46	10	THREAD BOTH ENDS	5/516	
2	x1bt	WT6 x 13	0	8			
8		3/4"Φ H.S. BOLT	0	2 1/4		61/3	
8		WASHERS FOR 3/4"Φ H.S. BOLTS				61/10	
4		3/4"Φ H.S. BOLT	0	2 1/4		61/5	
4		WASHERS FOR 3/4"Φ H.S. BOLTS				61/11	
8		1"Φ STD. HEX. NUTS				61/14	
8		WASHERS FOR 1"Φ RODS				61/12	

NO.	REVISION	DATE
1	const. joint moved control #15	11-19-84

HIGH STEEL STRUCTURES, INC.
1905 Old Philadelphia Pike
Lancaster, Pennsylvania 17603
Phone 717/299-5211
A Subsidiary of High Industries, Inc

GIRDER ~ G40
I-395 BRIDGE OVER PENOBSCOT RIVER
I-395 BRIDGE STA. 164 + 60.00
PENOBSCOT COUNTY
STATE OF MAINE
DEPARTMENT OF TRANSPORTATION

STATE CONTRACT OR REF. NO. 6 CONTRACTOR CIANBRO CORP.
IN CHARGE: HINKLE MADE BY: CS CHK.D. BY: JLC DATE: 9-27-84
CONTRACT NUMBER ME-84088-3 DRAWING NUMBER 30 OF 47

FED. ROAD DIV. NO.	STATE	FED. AID PROJ. NO.
1	ME	HIG3958(82)176

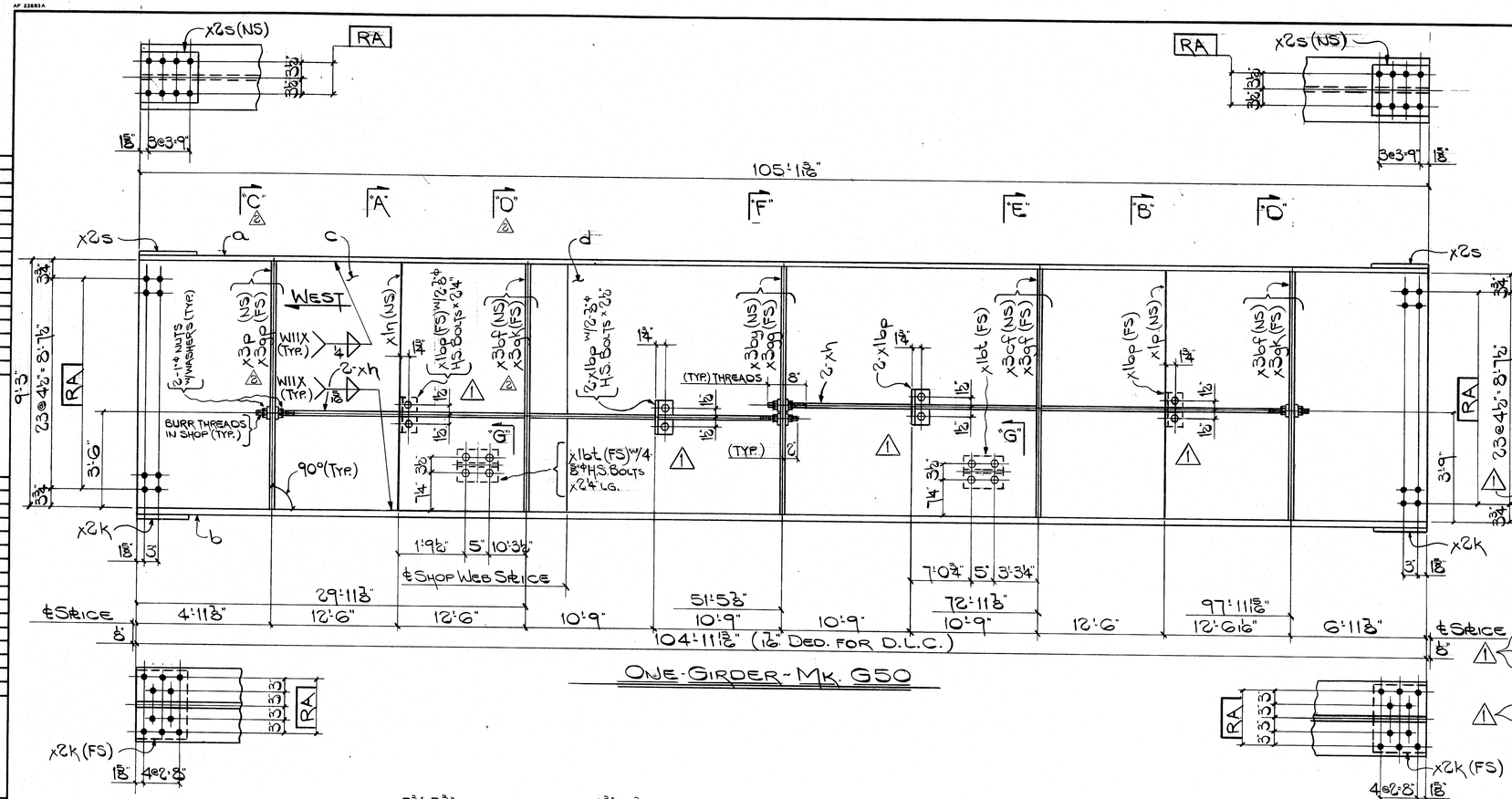

ONE-GIRDER-MK. G50

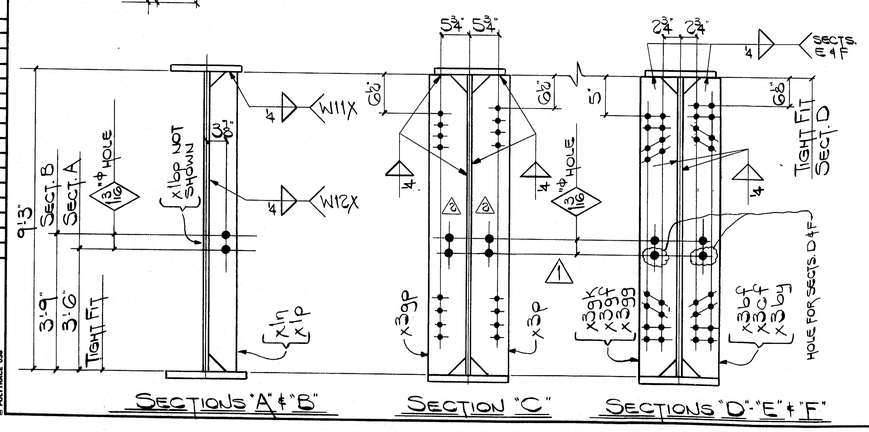

SECTIONS "A" & "B" SECTION "C" SECTIONS "D"-"E" & "F"

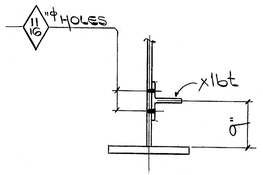

SECTION "G"

SHOP NOTE

HOLES: 15/16"φ (UNLESS NOTED)
BOLTS: AS NOTED
PAINT: NONE

FOR GENERAL NOTES - SEE DWG. N1
FOR CAMBER DIAGRAM - SEE DWG. W1

R95-208 CODE: 4000

BILL OF MATERIAL

NO.	MARK	DESCRIPTION	LENGTH		REMARKS	ITEM	TOTAL WEIGHT
ONE-GIRDER-MK. G50							38370
ONE	a	PL. 14 × 3/4	105	1 3/8			
ONE	b	PL. 16 × 1	104	11 3/8			
ONE	c	PL. 111 × 1 1/16	35	6 11/16			
ONE	d	PL. 111 × 1 1/16	69	6 1/2			
2	x2k	FILL PL. 15 × 4	0	11 1/8			
2	x2s	FILL PL. 11 × 1/2	1	0 1/8			
ONE	x1n	BAR 5 × 1/2	9	3			
ONE	x1p	BAR 5 × 1/2	9	3			
6	x1bp	L 5 × 3 × 3/4	0	6	△1		
2	x3bf	BAR 7 × 1/2	9	3			
2	x3gk				△1		
ONE	x3p						
ONE	x3gp				△1		
ONE	x3bj						
ONE	x3gg				△1		
ONE	x3cf						
ONE	x3gf	BAR 7 × 1/2	9	3	△1		
4	xh	1"φ ROD	46	10	THREAD BOTH ENDS	5/516	
2	x1bt	WT G × 13	0	8			
8		5/8"φ H.S. BOLT	0	2 1/4		61/3	
8		WASHERS FOR 5/8"φ H.S. BOLTS				61/10	
4		5/8"φ H.S. BOLT	0	2 1/4		61/5	
4		5/8"φ H.S. BOLT	0	2 1/2		61/6	
8		WASHERS FOR 5/8"φ H.S. BOLTS				61/11	
16		1"φ STD. HEX. NUTS				61/14	
16		WASHERS FOR 1"φ RODS				61/12	

NO.	REVISION	DATE
2	const. joint moved. control # 15	11-19-84
1	contract revision control # 14	9-20-84

HIGH STEEL STRUCTURES, INC.
1905 Old Philadelphia Pike
Lancaster, Pennsylvania 17603
Phone 717/299-5211
A Subsidiary of High Industries, Inc

GIRDER ~ G50
I-395 BRIDGE OVER PENOBSCOT RIVER
I-395 BRIDGE STA. 164 + 60.00
PENOBSCOT COUNTY
STATE OF MAINE
DEPARTMENT OF TRANSPORTATION

STATE CONTRACT OR REF. NO. 6 CONTRACTOR CIANBRO CORP.
IN CHARGE: HINKLE MADE BY: CS CHK.D BY: JLC DATE: 9-27-84
CONTRACT NUMBER: ME-84088-3 DRAWING NUMBER: 31 OF 47

AF 22683A

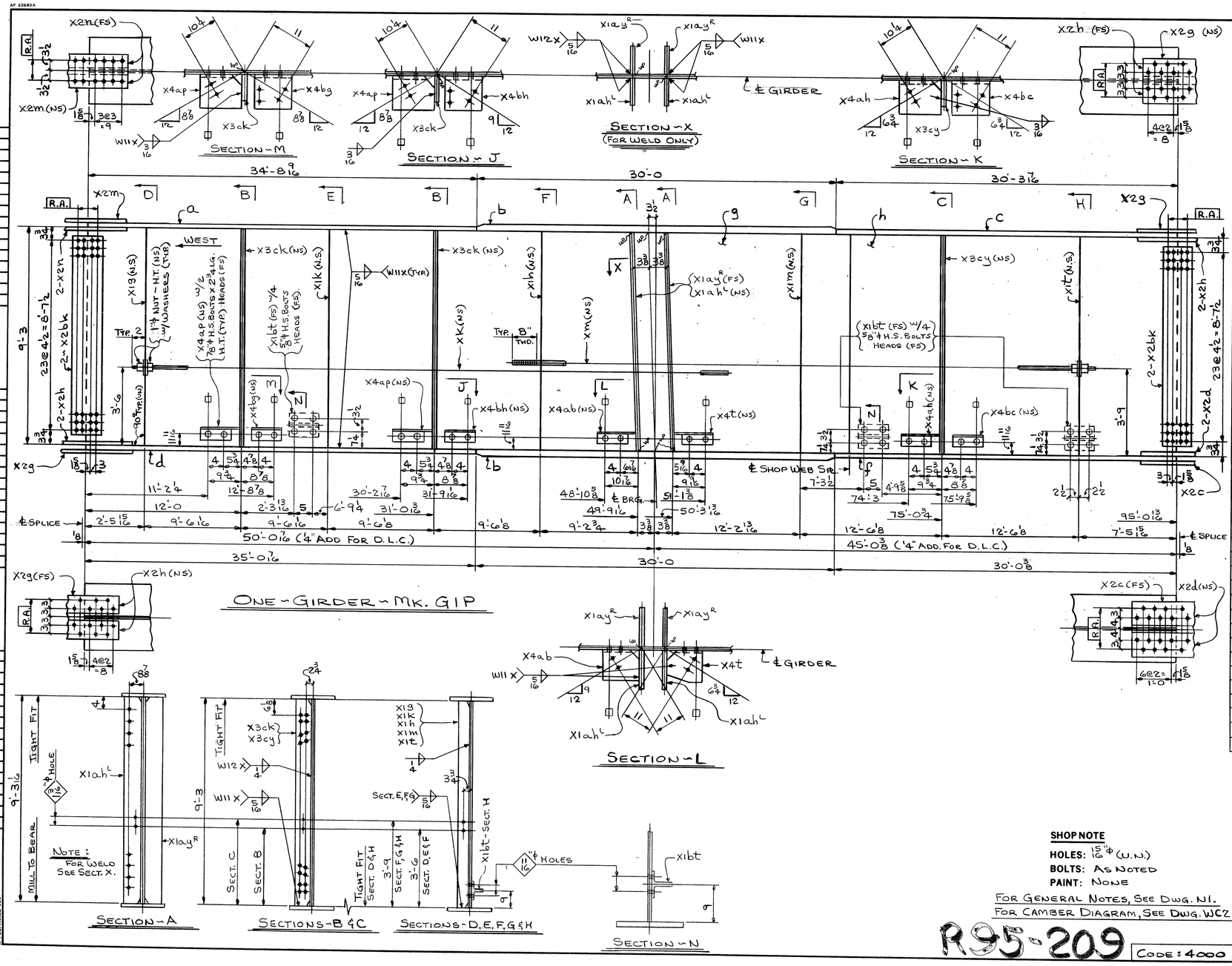

FED. ROAD DIV. NO.	STATE	FED. AID PROJ. NO.
1	ME	IIG-395-8(82)14

BILL OF MATERIAL

NO.	MARK	DESCRIPTION	LENGTH		REMARKS	ITEM	TOTAL WEIGHT
ONE	G1P	GIRDER					52900
ONE	a'	PL. 24 x 1 1/4	34	8 9/16			
2	b	PL. 24 x 2 1/4	30	0			
ONE	c	PL. 24 x 1 1/4	30	3 7/16			
	d	PL. 24 x 1 1/4	35	0 7/16			
	f	PL. 24 x 1 1/4	30	0 3/8			
	g	PL. 111 x 7/16	66	1			
	h	PL. 111 x 7/16	28	11 13/16			
	x1g	BAR 5 x 1/2	9	3			
	x1h						
	x1k						
	x1m						
	x1t	BAR 5 x 1/2	9	3			
	xk	1" ϕ ROD	57	0 1/4	THD. BOTH ENDS	5/12	
ONE	xm	1" ϕ ROD	50	2 3/4	THD. BOTH ENDS	5/11	
4		WASH. FOR 1" ϕ ROD				81/12	
4		1" ϕ STD. HEX. NUTS				81/14	
2	x2g	PL. 15 x 9/16	1	10 1/2			
4	x2h	BAR 6 x 3/4	1	10 1/2			
ONE	x2m	PL. 11 x 1/2	2	0 1/2			
2	x2n	BAR 4 x 3/4	2	0 1/2			
4	x2bk	PL. 106 1/2 x 1/2	1	0 1/2			
ONE	x2c	PL. 19 x 1 1/16	2	6 1/2			
2	x2d	BAR 8 x 7/8	2	6 1/2			
2	x3ck	BAR 7 x 1/2	9	3			
ONE	x3cy	BAR 7 x 1/2	9	3			
3	x1bt	WT 6 x 13	0	8			
16		WASH. FOR 7/8" ϕ H.S. BOLTS				81/11	
16		7/8" ϕ H.S. BOLTS	0	2 3/4		81/7	
12		5/8" ϕ H.S. BOLTS	0	2 1/4		81/3	
12		WASH. FOR 5/8" ϕ H.S. BOLTS				81/10	
2	x1ah'	PL. 10 x 1"	9	3 1/16			
2	x1ay'	PL. 10 x 1"	9	3 1/16			
ONE	x4t	PL. MC 18 x 45.8	0	11 1/2			
	x4ab		0	11 1/2			
	x4ah		0	11 1/2			
	x4bc		0	10			
	x4bh		0	10			
ONE	x4bg		0	10			
2	x4ap	PL. MC 18 x 45.8	0	11 1/2			

NO.	REVISION	DATE

HIGH STEEL STRUCTURES, INC.
1905 Old Philadelphia Pike
Lancaster, Pennsylvania 17603
Phone 717/299-5211
A Subsidiary of High Industries, Inc

GIRDER G1P
I-395 BRIDGE OVER PENOBSCOT RIVER
I-395 BRIDGE STA. 164+60.00
PENOBSCOT COUNTY
STATE OF MAINE
DEPARTMENT OF TRANSPORTATION

STATE CONTRACT OR REF. NO. 6 CONTRACTOR GANBRO CORP.

IN CHARGE: HINKLE MADE BY: G.F.Z. CHK.D. BY: JLC DATE: 10-1-84

CONTRACT NUMBER: ME-84088-3 DRAWING NUMBER: 32 OF 47

SHOP NOTE

HOLES: 15/16" ϕ (U.N.)
BOLTS: AS NOTED
PAINT: NONE

FOR GENERAL NOTES, SEE DWG. N1.
FOR CAMBER DIAGRAM, SEE DWG. WC2

R95-209

CODE: 4000

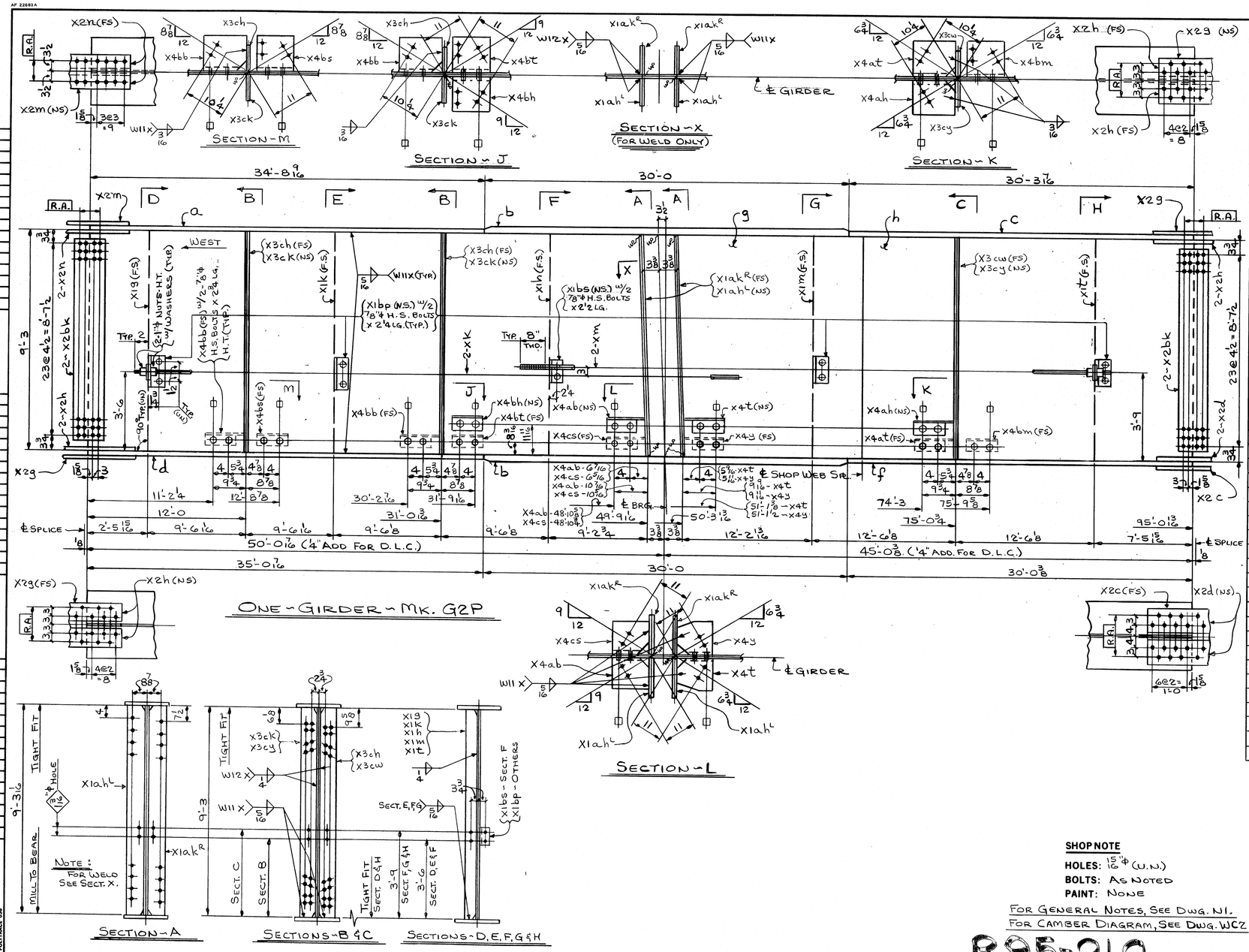

FED. ROAD DIV. NO.	STATE	FED. AID PROJ. NO.
1	ME.	IIG-395-8(88)174

BILL OF MATERIAL

NO.	MARK	DESCRIPTION	LENGTH		REMARKS	ITEM	TOTAL WEIGHT
ONE	G2P	GIRDER					53,675
ONE	X3cy	BAR 7 x 1/2	9	3			
ONE	a'	PL. 24 x 1 1/4	34	8 9/16			
2	b	PL. 24 x 2 1/4	30	0			
ONE	c	PL. 24 x 1 1/4	30	3 7/16			
	d	PL 24 x 1 1/4	35	0 7/16			
	f	PL. 24 x 1 1/4	30	0 3/8			
	g	PL. 111 x 11/16	66	1			
	h	PL. 111 x 11/16	28	11 13/16			
	X19	BAR 5 x 1/2	9	3			
	X1h						
	X1k						
	X1m						
ONE	X1t	BAR 5 x 1/2	9	3			
2	X1k	1"φ ROD	57	0 1/4	THD. BOTH ENDS	S/12	
2	X1m	1"φ ROD	50	2 3/4	THD. BOTH ENDS	S/11	
8		WASH. FOR 1"φ ROD				BI/12	
8		1"φ STD. HEX. NUTS				BI/14	
2	X2g	PL. 15 x 9/16	1	10 1/2			
4	X2h	BAR 6 x 3/4	1	10 1/2			
ONE	X2m	PL. 11 x 1/2	2	0 1/2			
2	X2n	BAR 4 x 3/4	2	0 1/2			
4	X2bk	PL. 10 1/2 x 1/2	1	0 1/2			
ONE	X2c	PL. 19 x 11/16	2	6 1/2			
2	X2d	BAR 8 x 7/8	2	6 1/2			
2	X1ak^R	PL. 10 x 1"	9	3 1/6			
2	X1ah^L	PL. 10 x 1"	9	3 1/6			
ONE	X3cw	BAR 7 x 1/2	9	3			
34		WASH. FOR 7/8"φ H.S. BOLTS				BI/11	
24		7/8"φ H.S. BOLTS	0	2 3/4		BI/7	
2		7/8"φ H.S. BOLTS	0	2 1/2		BI/6	
8		7/8"φ H.S. BOLTS	0	2 1/4		BI/5	
2	X3ch	BAR 7 x 1/2	9	3			
2	X3ck	BAR 7 x 1/2	9	3			
4	X1bp	L 5 x 3 x 1/4	0	6			
ONE	X1bs	L 5 x 3 1/2 x 1/2	0	6			
2	X4bb	PL. MC18 x 45.8	0	11 1/2			
ONE	X4bh		0	10			
	X4bm		0	10			
	X4bs		0	10			
	X4bt		0	10			
	X4cs		0	11 1/2			
	X4ab		0	11 1/2			
	X4ah		0	11 1/2			
	X4at		0	11 1/2			
	X4t		0	11 1/2			
ONE	X4y	PL. MC18 x 45.8	0	11 1/2			

NO.	REVISION	DATE

HIGH STEEL STRUCTURES, INC.
1905 Old Philadelphia Pike
Lancaster, Pennsylvania 17603
Phone 717/299-5211
A Subsidiary of High Industries, Inc.

GIRDER G2P
I-395 BRIDGE OVER PENOBSCOT RIVER
I-395 BRIDGE STA. 164 + 60.00
PENOBSCOT COUNTY
STATE OF MAINE
DEPARTMENT OF TRANSPORTATION

STATE CONTRACT OR REF. NO. 6 CONTRACTOR GANBRO CORP.
IN CHARGE: HINKLE MADE BY G.F.Z. CHK.D. BY JLC DATE 10-1-84
CONTRACT NUMBER ME-84088-3 DRAWING NUMBER 33 OF 47

SHOP NOTE

HOLES: 15/16"φ (U.N.)
BOLTS: AS NOTED
PAINT: NONE

FOR GENERAL NOTES, SEE DWG. N1.
FOR CAMBER DIAGRAM, SEE DWG. WC2

R95-210

CODE: 4000

AF 22683A

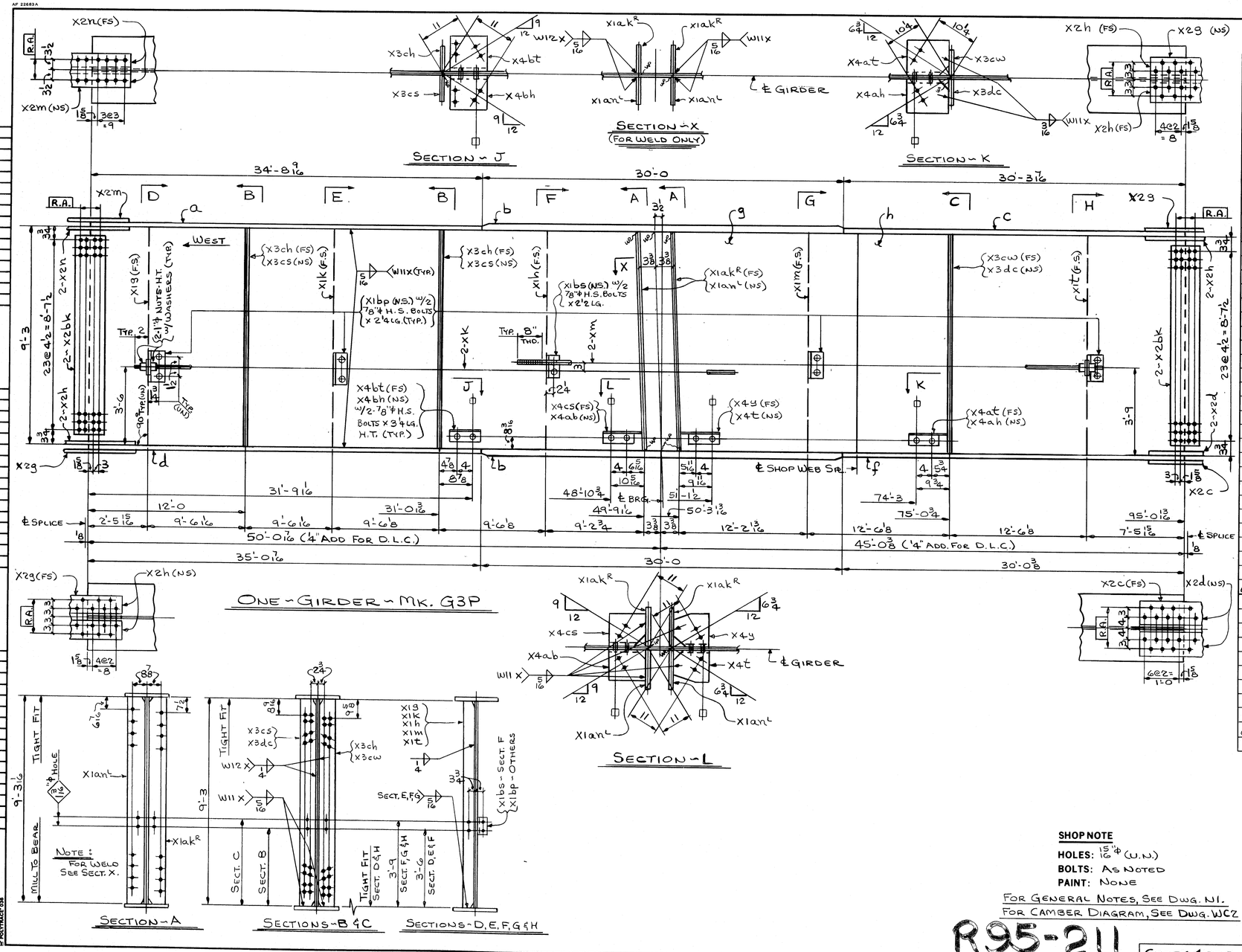

FED. ROAD DIV. NO.	STATE	FED. AID PROJ. NO.
1	ME	IIG-395-8(82)114

BILL OF MATERIAL

NO.	MARK	DESCRIPTION	LENGTH		REMARKS	ITEM	TOTAL WEIGHT
ONE	G3P	GIRDER					53,515
ONE	a	PL. 24 x 1¼	34	8 9/16			
2	b	PL. 24 x 2¼	30	0			
ONE	c	PL. 24 x 1¼	30	3 7/16			
	d	PL. 24 x 1¼	35	0 7/16			
	f	PL. 24 x 1¼	30	0 3/8			
	g	PL. 111 x 1/16	66	1			
	h	PL. 111 x 7/16	28	11 13/16			
	X19	BAR 5 x ½	9	3			
	X1h						
	X1k						
	X1m						
ONE	X1t	BAR 5 x ½	9	3			
2	X1k	1"φ ROD	57	0¼	THD. BOTH ENDS	5/12	
2	X1m	1"φ ROD	50	2¾	THD. BOTH ENDS	5/11	
8		WASH. FOR 1"φ ROD				61/12	
8		1"φ STD. HEX. NUTS				61/14	
2	X2g	PL. 15 x 9/16	1	10½			
4	X2h	BAR 6 x ¾	1	10½			
ONE	X2m	PL. 11 x ½	2	0½			
2	X2n	BAR 4 x ¾	2	0½			
4	X2bk	PL. 10 6/8 x ½	1	0½			
ONE	X2c	PL. 19 x 7/16	2	6½			
2	X2d	BAR 8 x ⅞	2	6½			
2	X1ak R	PL. 10 x 1"	9	3 1/16			
2	X1an L	PL. 10 x 1"	9	3 1/16			
18		WASH. FOR ⅞"φ H.S. BOLTS				81/11	
8		⅞"φ H.S. BOLTS	0	3¼		81/8	
2		⅞"φ H.S. BOLTS	0	2½		81/6	
8		⅞"φ H.S. BOLTS	0	2¼		81/5	
2	X3ch	BAR 7 x ½	9	3			
2	X3cs	BAR 7 x ½	9	3			
4	X1bp	L 5 x 3 x ¼	0	6			
ONE	X1bs	L 5 x 3½ x ½	0	6			
	X3cw	BAR 7 x ½	9	3			
	X3dc	BAR 7 x ½	9	3			
	X4t	PL MC18 x 45.8	0	11½			
	X4y		0	11½			
	X4ab		0	11½			
	X4ah		0	11½			
	X4at		0	11½			
	X4bh		0	10			
	X4bt		0	10			
ONE	X4cs	PL MC18 x 45.8	0	11½			

NO.	REVISION	DATE

HIGH STEEL STRUCTURES, INC.
1905 Old Philadelphia Pike
Lancaster, Pennsylvania 17603
Phone 717/299-5211
A Subsidiary of High Industries, Inc

GIRDER G3P
I-395 BRIDGE OVER PENOBSCOT RIVER
I-395 BRIDGE STA. 164 +60.00
PENOBSCOT COUNTY
STATE OF MAINE
DEPARTMENT OF TRANSPORTATION

STATE CONTRACT OR REF. NO. 6 CONTRACTOR GANDRO CORP.
IN CHARGE: HINKLE MADE BY: G.F.Z. CHK.D. BY: JLC DATE: 10-1-84
CONTRACT NUMBER: ME-84088-3 DRAWING NUMBER: 34 OF 47

SHOP NOTE

HOLES: 15/16"φ (U.N.)
BOLTS: AS NOTED
PAINT: NONE

FOR GENERAL NOTES, SEE DWG. N1.
FOR CAMBER DIAGRAM, SEE DWG. WC2

R95-211

CODE: 4000

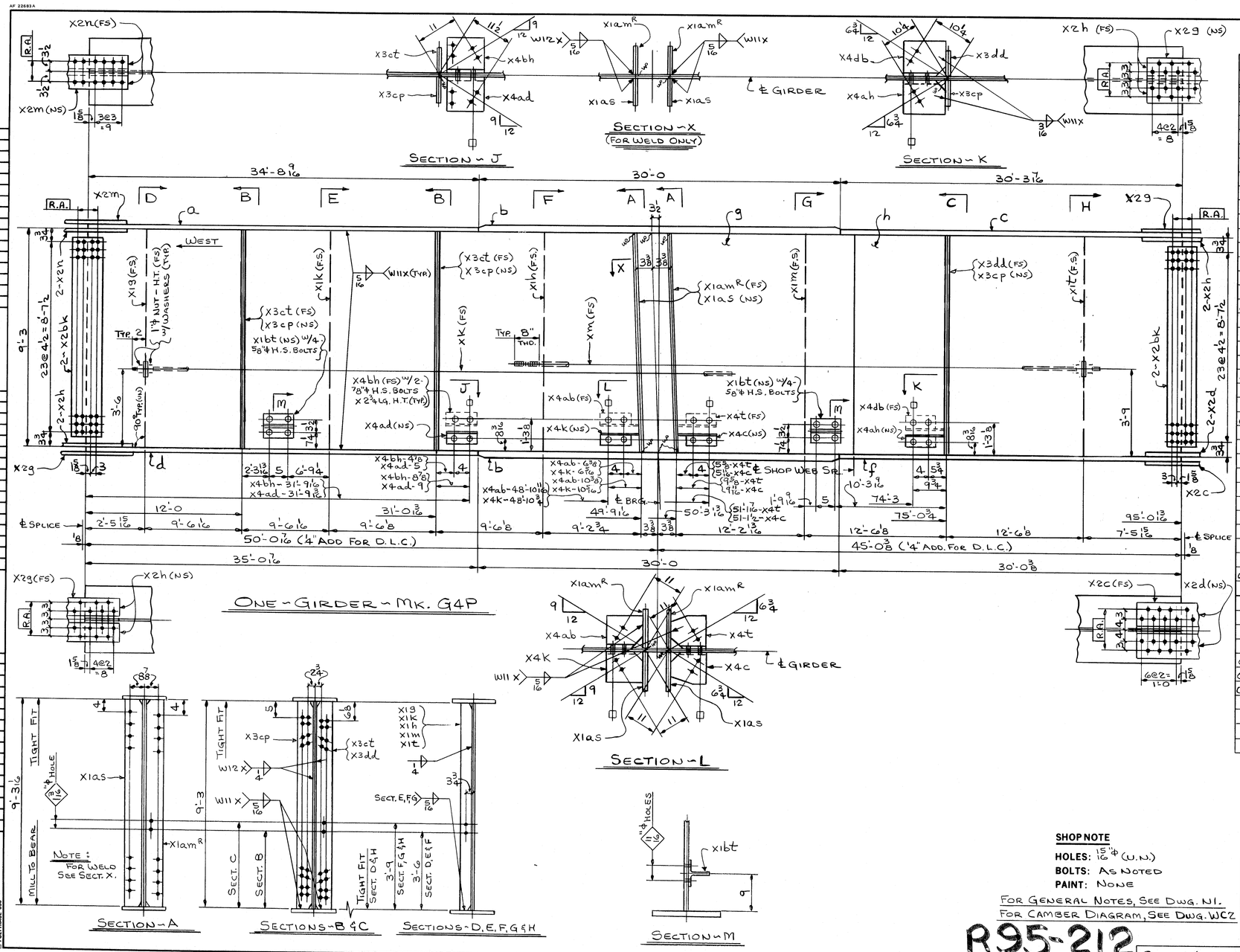

FED. ROAD DIV. NO.	STATE	FED. AID PROJ. NO.
1	ME	IIG-395-8(88)176

BILL OF MATERIAL

NO.	MARK	DESCRIPTION	LENGTH		REMARKS	ITEM	TOTAL WEIGHT
ONE	G4P	GIRDER					53220
ONE	a	PL. 24 x 1¼	34	8 9/16			
2	b	PL. 24 x 24	30	0			
ONE	c	PL. 24 x 1¼	30	3 7/16			
	d	PL 24 x 1¼	35	0 7/16			
	f	PL. 24 x 1¼	30	0 3/8			
	g	PL. 111 x 11/16	66	1			
	h	PL. 111 x 11/16	28	11 15/16			
	X19	BAR 5 x ½	9	3			
	x1h						
	x1k						
	x1m						
	x1t	BAR 5 x ½	9	3			
	XK	1"ϕ ROD	57	0¼	THD. BOTH ENDS	S 12	
ONE	xm	1"ϕ ROD	50	2¾	THD. BOTH ENDS	S 11	
4		WASH. FOR 1"ϕ ROD				B1 12	
4		1"ϕ STD. HEX. NUTS				B1 14	
2	X29	PL. 15 x 9/16	1	10½			
4	x2h	BAR 6 x ¾	1	10½			
ONE	x2m	PL. 11 x ½	2	0½			
2	x2n	BAR 4 x ¾	2	0½			
4	x2bk	PL. 106½ x ½	1	0½			
ONE	X2c	PL. 19 x 1 1/16	2	6½			
2	x2d	BAR 8 x 7/8	2	6½			
2	x1amR	PL. 10 x 1"	9	3 1/16			
2	x1as	PL. 10 x 1"	9	3 1/16			
8		WASH. FOR 5/8"ϕ H.S. BOLTS				B1 10	
16		WASH. FOR 7/8"ϕ H.S. BOLTS				B1 11	
16		7/8"ϕ H.S. BOLTS	0	2¾		B1 7	
8		5/8"ϕ H.S. BOLTS	0	2¼		B1 3	
2	x1bt	WT 6 x 13	0	8			
3	x3cP	BAR 7 x ½	9	3			
2	x3ct	BAR 7 x ½	9	3			
ONE	x3dd	BAR 7 x ½	9	3			
	x4c	PL. MC18 x 45.8	0	11½			
	x4k		0	11½			
	x4t		0	11½			
	x4ab		0	11½			
	x4ad		0	9½			
ONE	x4bh		0	10			
ONE	x4ah	PL. MC18 x 45.8	0	11½			
ONE	x4db	PL. MC18 x 45.8	0	11½			

NO.	REVISION	DATE

HIGH STEEL STRUCTURES, INC.
1905 Old Philadelphia Pike
Lancaster, Pennsylvania 17603
Phone 717/299-5211
A Subsidiary of High Industries, Inc

GIRDER G4P
I-395 BRIDGE OVER PENOBSCOT RIVER
I-395 BRIDGE STA. 164+60.00
PENOBSCOT COUNTY
STATE OF MAINE
DEPARTMENT OF TRANSPORTATION

STATE CONTRACT OR REF. NO. 6 CONTRACTOR GIANBRO CORP.
IN CHARGE: HINKLE MADE BY: G.F.Z. CHK.D. BY: JLC DATE: 10-1-84
CONTRACT NUMBER: ME-84088-3 DRAWING NUMBER: 35 OF 47

SHOP NOTE
HOLES: 15/16"ϕ (U.N.)
BOLTS: AS NOTED
PAINT: NONE

FOR GENERAL NOTES, SEE DWG. N1.
FOR CAMBER DIAGRAM, SEE DWG. WC2

R95-212

CODE: 4000

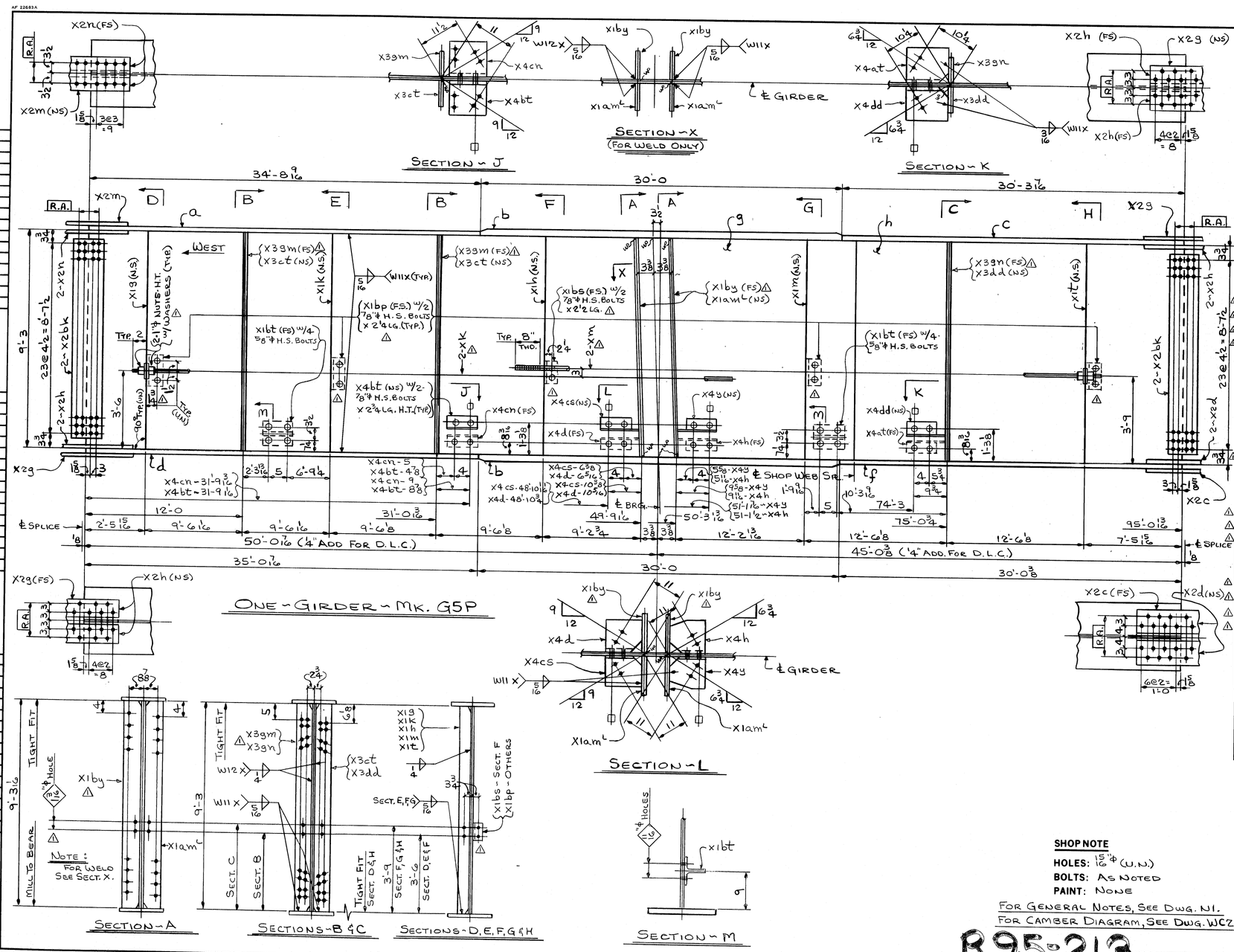

FED. ROAD DIV. NO.	STATE	FED. AID PROJ. NO.
1	ME	IIG-395-8(82)174

BILL OF MATERIAL

NO.	MARK	DESCRIPTION	LENGTH		REMARKS	ITEM	TOTAL WEIGHT
ONE	G5P	GIRDER					53,540
ONE	X4dd	PL. MC18 x 45.8	0	11½			
ONE	a	PL. 24 x 1¼	34	8 9/16			
2	b	PL. 24 x 2¼	30	0			
ONE	c	PL. 24 x 1¼	30	3 7/16			
	d	PL. 24 x 1¼	35	0 7/16			
	f	PL. 24 x 1¼	30	0⅜			
	g	PL. 111 x 11/16	66	1			
	h	PL. 111 x 11/16	28	11 11/16			
	X19	BAR 5 x ½	9	3			
	X1h						
	X1k						
	X1m						
ONE	X1t	BAR 5 x ½	9	3			
△ 2	XK	1"φ ROD	57	0¼	THD. BOTH ENDS	5/12	
△ 2	Xm	1"φ ROD	50	2¾	THD. BOTH ENDS	5/11	
△ 8		WASH. FOR 1"φ ROD				B1/12	
△ 8		1"φ STD. HEX. NUTS				B1/14	
2	X2g	PL. 15 x 9/16	1	10½			
4	X2h	BAR 6 x ¾	1	10½			
ONE	X2m	PL. 11 x ½	2	0½			
2	X2n	BAR 4 x ¾	2	0½			
4	X2bk	PL. 10 6/16 x ½	1	0½			
ONE	X2c	PL. 19 x 11/16	2	6½			
2	X2d	BAR 8 x ⅞	2	6½			
2	X1by	PL. 10 x 1"	9	3 1/16			
2	X1am	PL. 10 x 1"	9	3 1/16			
8		WASH. FOR ⅝"φ H.S. BOLTS				B1/10	
26		WASH. FOR ⅞"φ H.S. BOLTS				B1/11	
△ 16		⅞"φ H.S. BOLTS	0	2¾		B1/7	
△ 2		⅞"φ H.S. BOLTS	0	2½		B1/6	
△ 8		⅞"φ H.S. BOLTS	0	2¼		B1/5	
8		⅝"φ H.S. BOLTS	0	2¼		B1/3	
2	X1bt	WT 6 x 13	0	8			
△ 4	X1bp	L 5 x 3 x ¼	0	6			
△ ONE	X1bs	L 5 x 3½ x ½	0	6			
△ 2	X3gm	BAR 7 x ½	9	3			
△ ONE	X3gn						
2	X3ct						
ONE	X3dd	BAR 7 x ½	9	3			
	X4d	PL. MC18 x 45.8	0	11½			
	X4h		0	11½			
	X4y		0	11½			
	X4bt		0	10			
	X4cn		0	9½			
ONE	X4cs		0	11½			
ONE	X4at	PL. MC18 x 45.8	0	11½			

NO.	REVISION	DATE
△	CONTRACT REVISION CONTROL #14	9/28/84

HIGH STEEL STRUCTURES, INC.
1905 Old Philadelphia Pike
Lancaster, Pennsylvania 17603
Phone 717/299-5211
A Subsidiary of High Industries, Inc

GIRDER G5P
I-395 BRIDGE OVER PENOBSCOT RIVER
I-395 BRIDGE STA. 164 + 60.00
PENOBSCOT COUNTY
STATE OF MAINE
DEPARTMENT OF TRANSPORTATION

STATE CONTRACT OR REF. NO.: 6 CONTRACTOR: GANERO CORP.
IN CHARGE: HINKLE MADE BY: G.F.Z. CHK.D. BY: JLC DATE: 10-1-84
CONTRACT NUMBER: ME-84088-3 DRAWING NUMBER: 36 OF 47

SHOP NOTE

HOLES: 15/16"φ (U.N.)
BOLTS: AS NOTED
PAINT: NONE

FOR GENERAL NOTES, SEE DWG. N1.
FOR CAMBER DIAGRAM, SEE DWG. WC2

R95-213

CODE: 4000

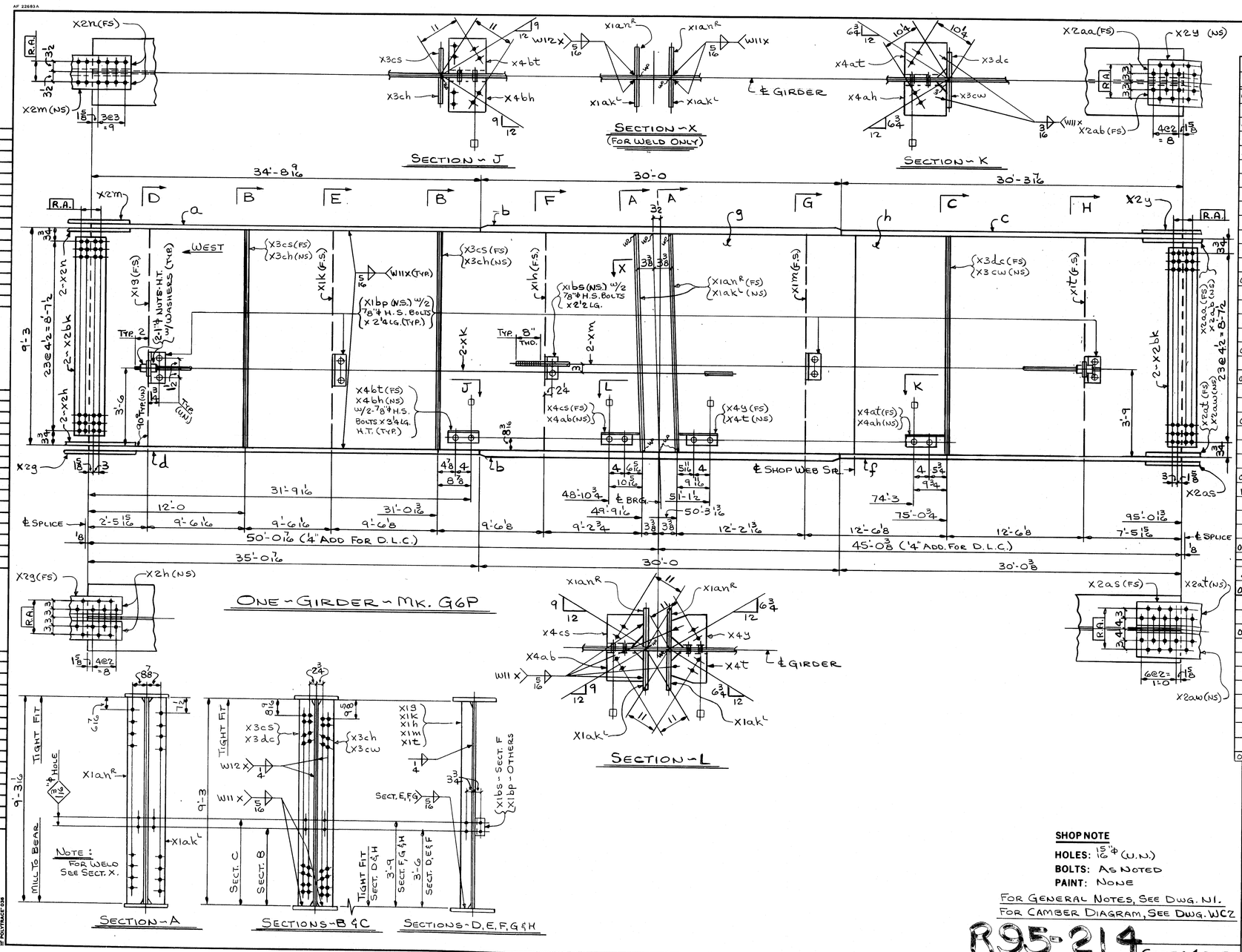

SHOP NOTE

HOLES: 15/16" ϕ (U.N.)

BOLTS: AS NOTED

PAINT: NONE

FOR GENERAL NOTES, SEE DWG. N1.

FOR CAMBER DIAGRAM, SEE DWG. WC2

R95-214

CODE: 4000

FED. ROAD DIV. NO.	STATE	FED. AID PROJ. NO.
1	ME	IIG-395-8(82)176

BILL OF MATERIAL

NO.	MARK	DESCRIPTION	LENGTH		REMARKS	ITEM	TOTAL WEIGHT
ONE	G6P	GIRDER					53,525
ONE	a	PL. 24 x 1 1/4	34	8 9/16			
2	b	PL. 24 x 2 1/4	30	0			
ONE	c	PL. 24 x 1 1/4	30	3 7/16			
	d	PL. 24 x 1 1/4	35	0 7/16			
	f	PL. 24 x 1 1/4	30	0 3/8			
	g	PL. 111 x 11/16	66	1			
	h	PL. 111 x 11/16	28	11 13/16			
	X19	BAR 5 x 1/2	9	3			
	X1h						
	X1k						
	X1m						
ONE	X1t	BAR 5 x 1/2	9	3			
2	Xk	1 1/4 ϕ ROD	57	0 1/4	THD. BOTH ENDS	S 12	
2	Xm	1 1/4 ϕ ROD	50	2 3/4	THD. BOTH ENDS	S 11	
8		WASH. FOR 1 1/4 ϕ ROD				B1 12	
8		1 1/4 ϕ STD. HEX. NUTS				B1 14	
ONE	X23	PL. 15 x 9/16	1	10 1/2			
2	X2h	BAR 6 x 3/4	1	10 1/2			
ONE	X2m	PL. 11 x 1/2	2	0 1/2			
2	X2n	BAR 4 x 3/4	2	0 1/2			
4	X2bk	PL. 10 1/2 x 1/2	1	0 1/2			
ONE	X2aa	BAR 6 3/16 x 3/4	1	10 1/2			
	X2ab	BAR 6 3/16 x 3/4	1	10 1/2			
	X2as	PL. 19 1/4 x 11/16	2	6 1/2			
	X2at	PL. 8 1/4 x 7/8	2	6 1/2			
ONE	X2aw	PL. 8 1/4 x 7/8	2	6 1/2			
18		WASH. FOR 7/8" ϕ H.S. BOLTS				B1 11	
8		7/8" ϕ H.S. BOLTS	0	3 1/4		B1 8	
2		7/8" ϕ H.S. BOLTS	0	2 1/2		B1 6	
8		7/8" ϕ H.S. BOLTS	0	2 1/4		B1 5	
ONE	X2y	PL. 15 3/16 x 9/16	1	10 1/2			
2	X1ank	PL. 10 x 1"	9	3 1/16			
2	X1akL	PL. 10 x 1"	9	3 1/16			
4	X1bp	L 5 x 3 x 1/4	0	6			
ONE	X1bs	L 5 x 3 1/2 x 1/2	0	6			
2	X3cs	BAR 7 x 1/2	9	3			
2	X3ch						
ONE	X3cw						
	X3dc	BAR 7 x 1/2	9	3			
	X4t	PL. MC 18 x 45.8	0	11 1/2			
	X4y		0	11 1/2			
	X4ab		0	11 1/2			
	X4ah		0	11 1/2			
	X4at		0	11 1/2			
	X4bh		0	10			
	X4bt		0	10			
ONE	X4cs	PL. MC 18 x 45.8	0	11 1/2			

NO.	REVISION	DATE

HIGH STEEL STRUCTURES, INC.
1905 Old Philadelphia Pike
Lancaster, Pennsylvania 17603
Phone 717/299-5211
A Subsidiary of High Industries, Inc

GIRDER G6P

I-395 BRIDGE OVER PENOBSCOT RIVER

I-395 BRIDGE STA. 164 + 60.00

PENOBSCOT COUNTY

STATE OF MAINE

DEPARTMENT OF TRANSPORTATION

STATE CONTRACT OR REF. NO. 6 CONTRACTOR GANBRO CORP.

IN CHARGE: HINKLE MADE BY: G.F.Z. CHK.D. BY: JLC DATE: 10-2-84

CONTRACT NUMBER: ME-84088-3 DRAWING NUMBER: 37 OF 47

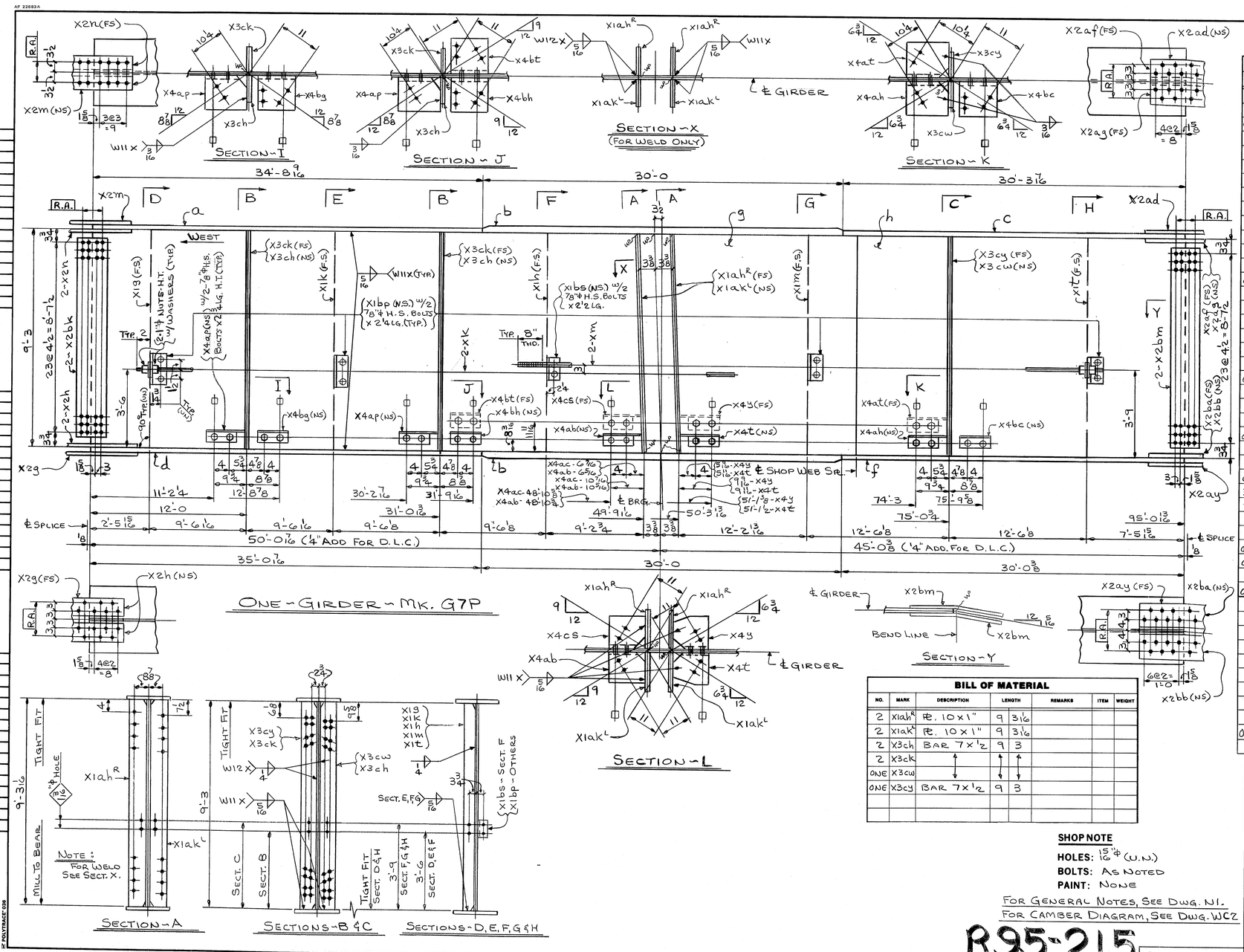

FED. ROAD DIV. NO.	STATE	FED. AID PROJ. NO.
1	ME	IIG-395-8(82)176

BILL OF MATERIAL

NO.	MARK	DESCRIPTION	LENGTH		REMARKS	ITEM	TOTAL WEIGHT
ONE	G7P	GIRDER					53710
ONE	a	PL. 24 x 1 1/4	34	8 9/16			
2	b	PL. 24 x 2 1/4	30	0			
ONE	c	PL. 24 x 1 1/4	30	3 7/16			
	d	PL 24 x 1 1/4	35	0 7/16			
	f	PL. 24 x 1 1/4	30	0 3/8			
	g	PL. 111 x 11/16	66	1			
	h	PL. 111 x 11/16	88	11 13/16			
	X19	BAR 5 x 1/2	9	3			
	X1h						
	X1k						
	X1m						
ONE	X1t	BAR 5 x 1/2	9	3			
2	X1k	1" ϕ ROD	57	0 1/4	THD. BOTH ENDS	S/12	
2	X1m	1" ϕ ROD	50	2 3/4	THD. BOTH ENDS	S/11	
8		WASH. FOR 1" ϕ ROD				B1/12	
8		1" ϕ STD. HEX. NUTS				B1/14	
ONE	X23	PL. 15 x 9/16	1	10 1/2			
2	X2h	BAR 6 x 3/4	1	10 1/2			
ONE	X2m	PL. 11 x 1/2	2	0 1/2			
2	X2n	BAR 4 x 3/4	2	0 1/2			
2	X2bk	PL. 10 1/2 x 1/2	1	0 1/2			
2	X2bm	PL. 10 1/2 x 1/2	1	0 1/2	BENT		
ONE	X2ad	PL. 15 5/16 x 9/16	1	10 1/2			
	X2af	BAR 6 5/16 x 3/4	1	10 1/2			
	X2a3	BAR 6 5/16 x 3/4	1	10 1/2			
ONE	X2a4	PL. 19 7/16 x 11/16	2	6 1/2			
34		WASH. FOR 7/8" ϕ H.S. BOLTS				B1/11	
24		7/8" ϕ H.S. BOLTS	0	2 3/4		B1/7	
2		7/8" ϕ H.S. BOLTS	0	2 1/2		B1/6	
8		7/8" ϕ H.S. BOLTS	0	2 1/4		B1/5	
ONE	X2ba	PL. 8 7/16 x 7/8	2	6 1/2			
ONE	X2bb	PL. 8 7/16 x 7/8	2	6 1/2			
4	X1bp	L 5 x 3 x 1/4	0	6			
ONE	X1bs	L 5 x 3 1/2 x 1/2	0	6			
	X4y	PL MC18 x 45.8	0	11 1/2			
	X4t		0	11 1/2			
	X4ab		0	11 1/2			
	X4cs		0	11 1/2			
	X4ah		0	11 1/2			
	X4at		0	11 1/2			
	X4bc		0	10			
	X4bg		0	10			
	X4bh		0	10			
ONE	X4bt		0	10			
2	X4ap	PL MC18 x 45.8	0	11 1/2			

BILL OF MATERIAL

NO.	MARK	DESCRIPTION	LENGTH		REMARKS	ITEM	WEIGHT
2	X1ah^R	PL. 10 x 1"	9	3 1/16			
2	X1ah^L	PL. 10 x 1"	9	3 1/16			
2	X3ch	BAR 7 x 1/2	9	3			
2	X3ck						
ONE	X3cw						
ONE	X3cy	BAR 7 x 1/2	9	3			

SHOP NOTE

HOLES: 15/16" ϕ (U.N.)
BOLTS: AS NOTED
PAINT: NONE

FOR GENERAL NOTES, SEE DWG. N1.
FOR CAMBER DIAGRAM, SEE DWG. WC2

R95-215

CODE: 4000

NO.	REVISION	DATE

HIGH STEEL STRUCTURES, INC.
1905 Old Philadelphia Pike
Lancaster, Pennsylvania 17603
Phone 717/299-5211
A Subsidiary of High Industries, Inc

GIRDER G7P
I-395 BRIDGE OVER PENOBSCOT RIVER
I-395 BRIDGE STA. 164+60.00
PENOBSCOT COUNTY
STATE OF MAINE
DEPARTMENT OF TRANSPORTATION

STATE CONTRACT OR REF. NO. 6 CONTRACTOR GIANBRO CORP.
IN CHARGE: HINKLE MADE BY: G.F.Z. CHK.D. BY: JLC DATE: 10-2-84
CONTRACT NUMBER: ME-84088-3 DRAWING NUMBER: 38 OF 47

FED. ROAD DIV. NO.	STATE	FED. AID PROJ. NO.
1	ME	IIG-395-8(82)176

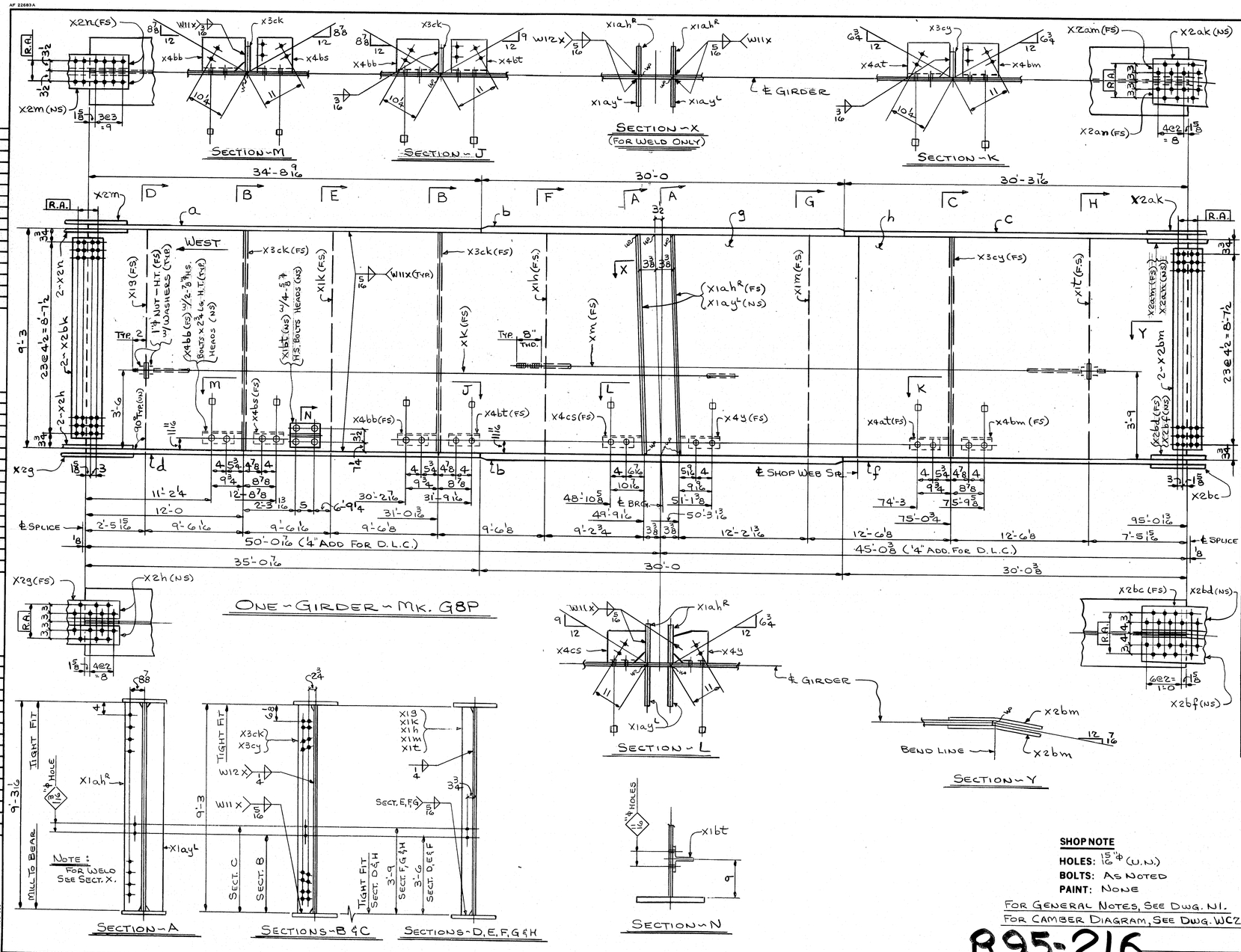

BILL OF MATERIAL

NO.	MARK	DESCRIPTION	LENGTH		REMARKS	ITEM	TOTAL WEIGHT
ONE	G8P	GIRDER					52,900
ONE	a'	PL. 24 x 1¼	34	8 9/16			40.78
2	b	PL. 24 x 2¼	30	0			16.00
ONE	c	PL. 24 x 1¼	30	3 7/16			87.72
	d	PL 24 x 1¼	35	0 7/16			70.72
	f	PL. 24 x 1¼	30	0 3/8			[illegible]
	g	PL. 111 x 11/16	66	1			27.00
	h	PL. 111 x 11/16	28	11 15/16			93.07
	X1g	BAR 5 x 1/2	9	3			78.63
	X1h						78.63
	X1k						[illegible]
	X1m						[illegible]
	X1t	BAR 5 x 1/2	9	3			[illegible]
	X1k	1 1/4" ROD	57	0¼	THD. BOTH ENDS	5/12	152.25
ONE	X1m	1 1/4" ROD	50	2¾	THD. BOTH ENDS	5/11	137.11
4		WASH. FOR 1 1/4" ROD				B1/12	2.08
4		1 1/4" STD. HEX. NUTS				B1/14	
ONE	X2g	PL. 15 x 9/16	1	10½			[illegible]
2	X2h	BAR 6 x ¾	1	10½			[illegible]
ONE	X2m	PL. 11 x ½	2	0½			38.19
2	X2n	BAR 4 x ¾	2	0½			41.01
2	X2bk	PL. 10 6/16 x ½	1	0½			[illegible]
2	X2bm	PL. 10 6/16 x ½	1	0½	BENT		[illegible]
ONE	X2am	BAR 6 7/16 x ¾	1	10½			[illegible]
	X2an	BAR 6 7/16 x ¾	1	10½			[illegible]
	X2bd	PL. 8 9/16 x ⅞	2	6½			64.6
ONE	X2bf	PL. 8 9/16 x ⅞	2	6½			64.56
16		WASH. FOR ⅞" H.S. BOLTS				B1/11	
16		⅞" H.S. BOLTS	0	2¾		B1/7	[illegible]
4		⅝" H.S. BOLTS				B1/3	
4		WASH. FOR ⅝" H.S. BOLTS				B1/10	
ONE	X2ak	PL. 15 7/16 x 9/16	1	10½			[illegible]
ONE	X2bc	PL. 19 9/16 x 11/16	2	6½			[illegible]
ONE	X1bt	WT 6 x 13	0	8			[illegible]
2	X3ck	BAR 7 x ½	9	3			[illegible]
ONE	X3cy	BAR 7 x ½	9	3			110.08
2	X1ah R	PL. 10 x 1"	9	3 1/16			[illegible]
2	X1ay L	PL. 10 x 1"	9	3 1/16			[illegible]
2	X4bb	PL. MC18 x 45.8	0	11½			[illegible]
ONE	X4bm		0	10			[illegible]
	X4bs		0	10			[illegible]
	X4bt		0	10			[illegible]
	X4cs		0	11½			[illegible]
	X4at		0	11½			[illegible]
ONE	X4y	PL. MC18 x 45.8	0	11½			[illegible]

NO.	REVISION	DATE

HIGH STEEL STRUCTURES, INC.
1905 Old Philadelphia Pike
Lancaster, Pennsylvania 17603
Phone 717/299-5211
A Subsidiary of High Industries, Inc.

SHOP NOTE

HOLES: 15/16" ϕ (U.N.)
BOLTS: AS NOTED
PAINT: NONE

FOR GENERAL NOTES, SEE DWG. N1.
FOR CAMBER DIAGRAM, SEE DWG. WC2

R95-216

CODE: 4000

GIRDER G8P
I-395 BRIDGE OVER PENOBSCOT RIVER
I-395 BRIDGE STA. 164+60.00
PENOBSCOT COUNTY
STATE OF MAINE
DEPARTMENT OF TRANSPORTATION

STATE CONTRACT OR REF. NO. 6 CONTRACTOR GANBRO CORP.
IN CHARGE: HINKLE MADE BY: G.F.Z. CHK.D. BY: JLC DATE: 10-2-84
CONTRACT NUMBER: ME-84088-3 DRAWING NUMBER: 39 OF 47

AF 32683A

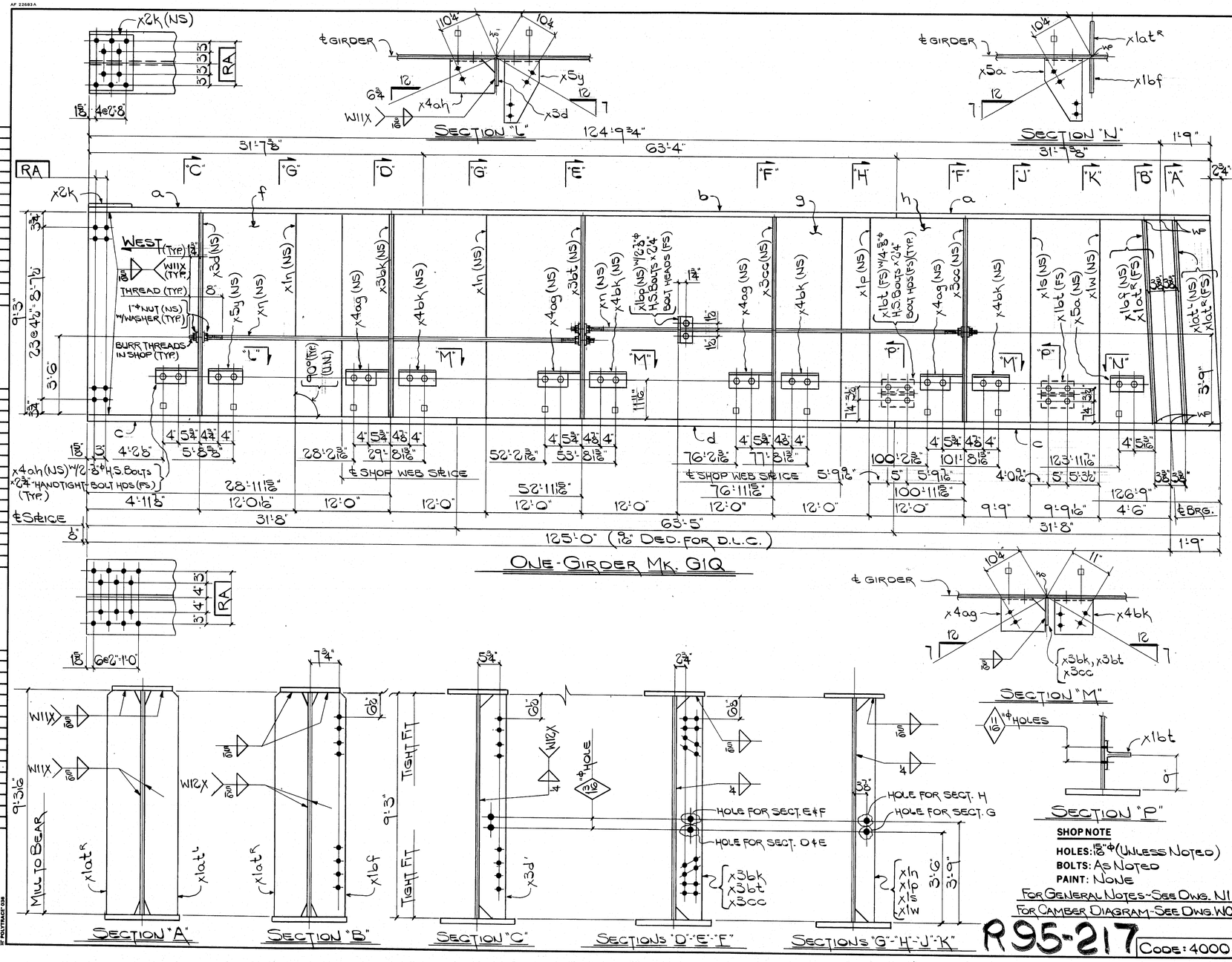

FED. ROAD DIV. NO.	STATE	FED. AID PROJ. NO.
1	ME	IIG395-8(82)176

BILL OF MATERIAL

NO.	MARK	DESCRIPTION	LENGTH		REMARKS	ITEM	TOTAL WEIGHT
ONE	GIRDER ~ MK. G1Q						53,470
2	a	PL. 16 × 1	31	7/8			
ONE	b	PL 16 × 1	63	4			
2	c	PL 20 × 1¼	31	8			
ONE	d	PL 20 × 1¼	63	5			
ONE	f	PL 111 × 1/2	31	0½			
ONE	g	PL 111 × 1/2	65	0½			
ONE	h	PL 111 × 1/2	40	9½			
ONE	x2k	FILL PL. 15 × ¼	0	11½			
2	x1n	BAR 5 × ½	9	3			
ONE	x1p	BAR 5 × ½	9	3			
ONE	x1s	BAR 5 × ½	9	3			
ONE	x1w	BAR 7 × 3/8	9	3			
3	x1at^L	PL. 9 × 1	9	3½	L-R		
ONE	x1bf	PL. 9 × 1	9	3½			
ONE	x3d	BAR 7 × ½	9	3			
ONE	x3bk	BAR 7 × ½	9	3			
ONE	x3bt	BAR 7 × ½	9	3			
2	x3cc	BAR 7 × ½	9	3			
ONE	x4ah	R. MC18 × 45.8	0	11½			
ONE	x5y	↕	0	8¾			
4	x4ag	↕	0	11½			
4	x4bk	↕	0	10			
ONE	x5a	R. MC18 × 45.8	0	8½			
2	x1bt	WT6 × 13	0	8			
ONE	x1bp	L 5 × 3 × ¼	0	6			
2	xn	1"φ ROD	48	4	THREAD BOTH ENDS	S/1	
8		3/8"φ H.S. BOLT	0	2¼		B1/5	
8		WASHERS FOR 3/8"φ H.S. BOLTS				B1/10	
2		3/8"φ H.S. BOLT	0	2¼		B1/6	
22		3/8"φ H.S. BOLT	0	2¾		B1/7	
24		WASHERS FOR 3/8"φ H.S. BOLTS				B1/11	
8		1"φ STD. HEX. NUTS				B1/14	
8		WASHERS FOR 1"φ RODS				B1/12	

SHOP NOTE

HOLES: 15/16"φ (UNLESS NOTED)
BOLTS: AS NOTED
PAINT: NONE

FOR GENERAL NOTES ~ SEE DWG. N1
FOR CAMBER DIAGRAM ~ SEE DWG. WC2

NO.	REVISION	DATE

HIGH STEEL STRUCTURES, INC.
1905 Old Philadelphia Pike
Lancaster, Pennsylvania 17603
Phone 717/299-5211
A Subsidiary of High Industries, Inc

GIRDER ~ G1Q
I-395 BRIDGE OVER PENOBSCOT RIVER
I-395 BRIDGE STA. 164 + 60.00
PENOBSCOT COUNTY
STATE OF MAINE
DEPARTMENT OF TRANSPORTATION

STATE CONTRACT OR REF. NO. 6 CONTRACTOR CIANBRO CORP.

IN CHARGE: HINKLE MADE BY: CS CHK.D. BY: JLC DATE: 10-2-84

CONTRACT NUMBER: ME-84088-3 DRAWING NUMBER: 40 OF 47

R95-217 CODE: 4000

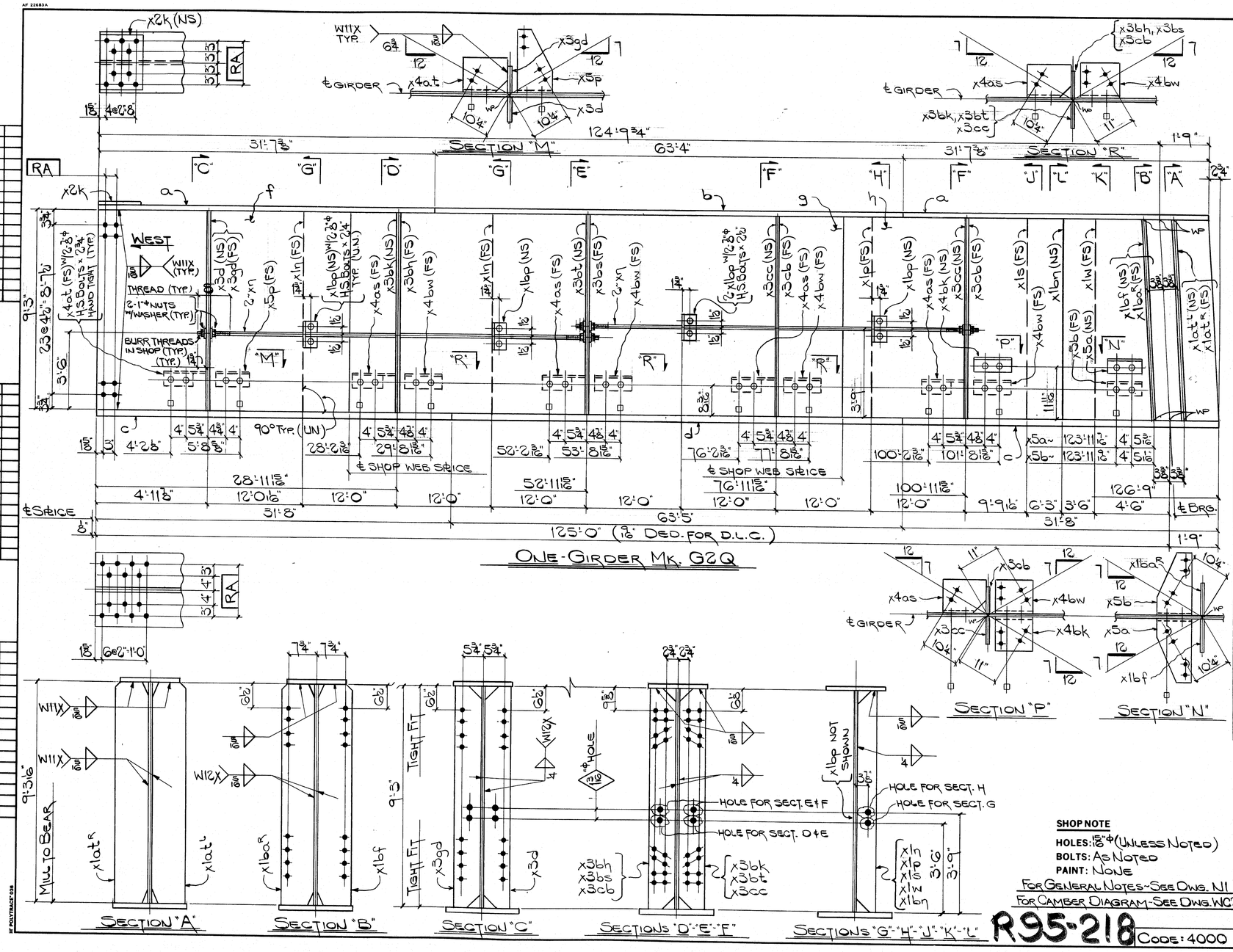

ONE-GIRDER MK. G2Q

FED. ROAD DIV. NO.	STATE	FED. AID PROJ. NO.
1	ME	I-IG-395-8(82)176

BILL OF MATERIAL

NO.	MARK	DESCRIPTION	LENGTH		REMARKS	ITEM	TOTAL WEIGHT
ONE		GIRDER ~ MK. G2Q					54,470
2	a	PL. 16 × 1	31	7 3/8			
ONE	b	PL 16 × 1	63	4			
2	c	PL 20 × 1 1/4	31	8			
ONE	d	PL 20 × 1 1/4	63	5			
ONE	f	PL 11 1/16 × 1 1/16	21	0 1/2			
ONE	g	PL 11 1/16 × 1 1/16	65	0 1/16			
ONE	h	PL 11 1/16 × 1 1/16	40	9 1/16			
ONE	x2k	FILL PL. 15 × 1/4	0	11 1/8			
2	x1n	BAR 5 × 1/2	9	3			
ONE	x1p	BAR 5 × 1/2	9	3			
ONE	x1s	BAR 5 × 1/2	9	3			
ONE	x1w	BAR 7 × 3/8	9	3			
ONE	x1bn	PL. 10 × 3/8	9	3			
2	x1at^L	PL. 9 × 1	9	3 1/16			
ONE	x1ba^R	PL. 9 × 1	9	3 1/16			
ONE	x1bf	PL. 9 × 1	9	3 1/16			
5	x1bp	L 5 × 3 × 1/4	0	6			
ONE	x3gd	BAR 7 × 1/2	9	3			
ONE	x3d	↑	↑	↑			
ONE	x3bh	↑	↑	↑			
ONE	x3bk	↑	↑	↑			
ONE	x3bs	↑	↑	↑			
ONE	x3bt	↑	↑	↑			
2	x3cb	↓	↓	↓			
2	x3cc	BAR 7 × 1/2	9	3			
ONE	x4at	PL MC18 × 45.8	0	11 1/2			
ONE	x5p	↑	0	8 3/4			
4	x4as		0	11 1/2			
4	x4bw		0	10			
ONE	x4bk		0	10			
ONE	x5a	↓	0	8 1/2			
ONE	x5b	PL MC18 × 45.8	0	8 1/2			
4	xn	1" ϕ ROD	48	4	THREADED BOTH ENDS	5/8	
6		3/4" ϕ H.S. BOLT	0	2 3/4		B1/5	
2		3/4" ϕ H.S. BOLT	0	2 1/2		B1/6	
26		3/4" ϕ H.S. BOLT	0	2 3/4		B1/7	
34		WASHERS FOR 3/4" ϕ H.S. BOLTS				B1/11	
16		1" ϕ STD. HEX. NUTS				B1/14	
16		WASHERS FOR 1" ϕ RODS				B1/12	

NO.	REVISION	DATE

HIGH STEEL STRUCTURES, INC.
1905 Old Philadelphia Pike
Lancaster, Pennsylvania 17603
Phone 717/299-5211
A Subsidiary of High Industries, Inc.

GIRDER ~ G2Q
I-395 BRIDGE OVER PENOBSCOT RIVER
I-395 BRIDGE STA. 164 + 60.00
PENOBSCOT COUNTY
STATE OF MAINE
DEPARTMENT OF TRANSPORTATION

STATE CONTRACT OR REF. NO. 6 CONTRACTOR CIANBRO CORP.
IN CHARGE: HINKLE MADE BY: CS CHK.D. BY: JLC DATE: 10-3-84
CONTRACT NUMBER: ME-84088-3 DRAWING NUMBER: 41 OF 47

FED. ROAD DIV. NO.	STATE	FED. AID PROJ. NO.
1	ME	IG-395-2(82)176

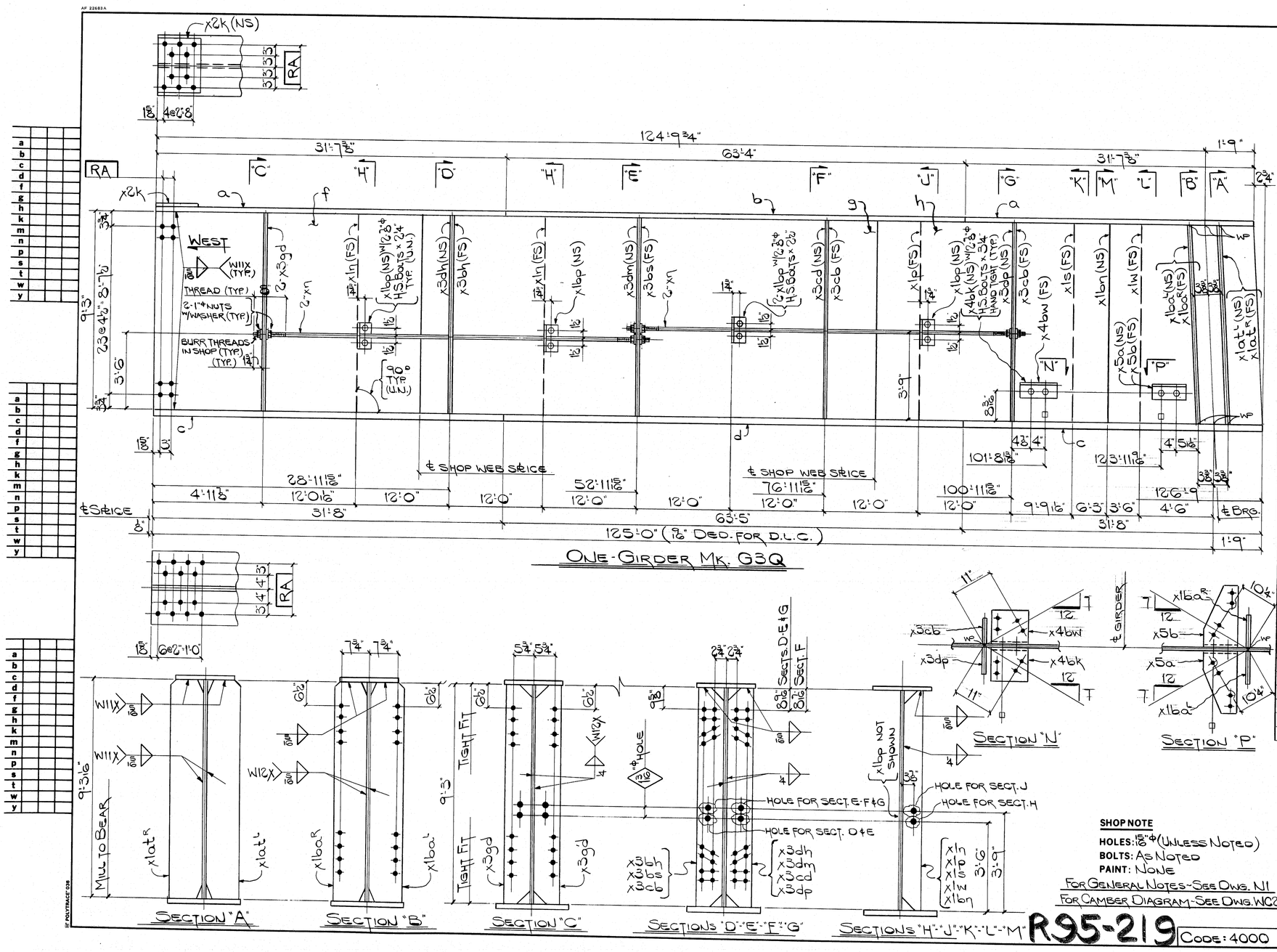

BILL OF MATERIAL

NO.	MARK	DESCRIPTION	LENGTH		REMARKS	ITEM	TOTAL WEIGHT
ONE	GIRDER ~ MK. G3Q						54,080
2	a	PL. 16 × 1	31	7 3/8			
ONE	b	PL 16 × 1	63	4			
2	c	PL 20 × 1 1/4	31	8			
ONE	d	PL 20 × 1 1/4	63	5			
ONE	f	PL 111 × 1 1/16	21	0 1/2			
ONE	g	PL 111 × 1 1/16	63	0 1/16			
ONE	h	PL 111 × 1/16	40	9 1/2			
ONE	x2k	FILL PL. 15 × 1/4	0	11 1/2			
2	x1n	BAR 5 × 1/2	9	3			
ONE	x1p	BAR 5 × 1/2	9	3			
ONE	x1s	BAR 5 × 1/2	9	3			
ONE	x1w	BAR 7 × 3/8	9	3			
ONE	x1bn	PL. 10 × 3/8	9	3			
2	x1ate	PL. 9 × 1	9	5 1/16			
ONE	x1bal	PL. 9 × 1	9	5 1/16			
ONE	x1bar	PL. 9 × 1	9	5 1/16			
5	x1bp	L 5 × 3 × 1/4	0	6			
2	x3gd	BAR 7 × 1/2	9	3			
ONE	x3bh	BAR 7 × 1/2	9	3			
ONE	x3dh	↕	↕	↕			
ONE	x3bs						
ONE	x3dm						
2	x3cb						
ONE	x3cd						
ONE	x3dp	BAR 7 × 1/2	9	3			
ONE	x4bk	PL MC18 × 45.8	0	10			
ONE	x4bw		0	10			
ONE	x5a		0	8 1/2			
ONE	x5b	PL MC18 × 45.8	0	8 1/2			
4	xn	1" ϕ ROD	48	4	THREADED BOTH ENDS	5/8	
6		3/4" ϕ H.S. BOLT	0	2 1/4		B1/5	
2		3/4" ϕ H.S. BOLT	0	2 1/2		B1/6	
4		3/4" ϕ H.S. BOLT	0	3 1/4		B1/8	
12		WASHERS FOR 3/4" ϕ H.S. BOLTS				B1/11	
16		1" ϕ STD. HEX. NUTS				B1/14	
16		WASHERS FOR 1" ϕ RODS				B1/12	

NO.	REVISION	DATE

HIGH STEEL STRUCTURES, INC.
1905 Old Philadelphia Pike
Lancaster, Pennsylvania 17603
Phone 717/299-5211
A Subsidiary of High Industries, Inc

GIRDER ~ G3Q
I-395 BRIDGE OVER PENOBSCOT RIVER
I-395 BRIDGE STA. 164 + 60.00
PENOBSCOT COUNTY
STATE OF MAINE
DEPARTMENT OF TRANSPORTATION

STATE CONTRACT OR REF. NO.: 6 CONTRACTOR: CIANBRO CORP.

IN CHARGE: HINKLE MADE BY: CS CHK.D. BY: JLC DATE: 10-3-84

CONTRACT NUMBER: ME-84088-3 DRAWING NUMBER: 42 OF 47

SHOP NOTE

HOLES: 13/16" ϕ (UNLESS NOTED)
BOLTS: AS NOTED
PAINT: NONE

FOR GENERAL NOTES ~ SEE DWG. N1
FOR CAMBER DIAGRAM ~ SEE DWG. WC2

R95-219

CODE: 4000